DDM 9/9 E6G3704 1F 4P 1V +SCT

DE WIT ventilatoren

Technical Data

DDM 9/9 E6G3704	Speed control	Curves	Nominal motor power W	Poles –	Phases	Connection	Mains frequency Hz	Max. power consumption W	Max. current consumption A	Speed 1/min
1F 4P 1V +SCT	(2)	[K1/K2]	600	4	1~		50/60	1480	6.3	1380

Technical Data

DDM 9/9 E6G3704	Operating Capacitor µF	Nominal capacitor voltage V	Motor protection class	Motor thermal class	Thermal protection	Media Temperature max. °C	Fan weight kg	Density of media kg/m³	Installation type (ISO 5801)	Article number
1F 4P 1V +SCT	25	450	IP55	F	EXT	40	17	1.2	B	6M020Z

(1) = Speed controllable via Transformer
(2) = Speed controllable via TRIAC or Transformer
(3) = Speed controllable via Inverter
* = No speed control available
[HI] High speed, [ME] Medium speed, [LO] Low speed

Attention! We suggest to do not use the fan in the grey marked area! The noise ratings given in the performance curves are sound power level L_{WA7}, see „Technical Description“.

Curves

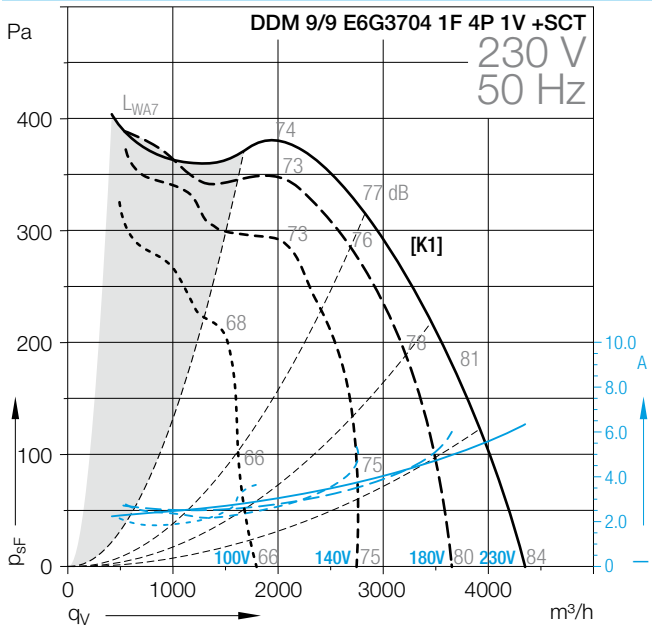

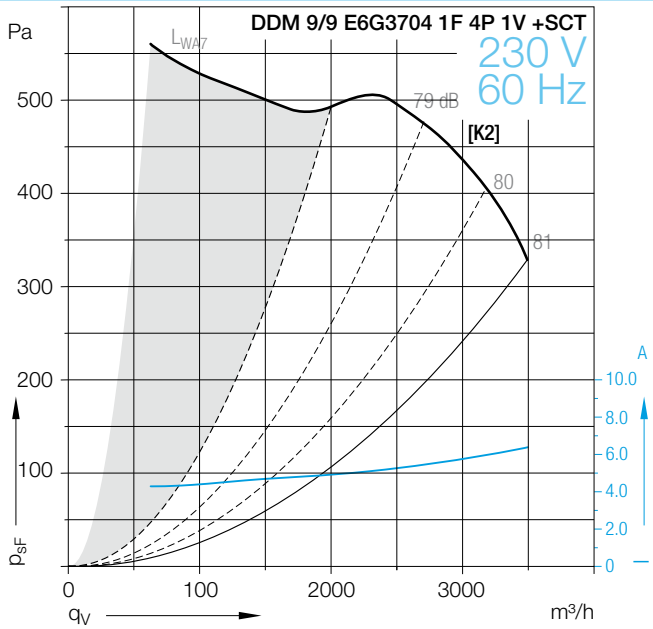

Dimensions in mm, Subject to change.

DDM 9/9 E6G3704 1F 4P 1V +SCT

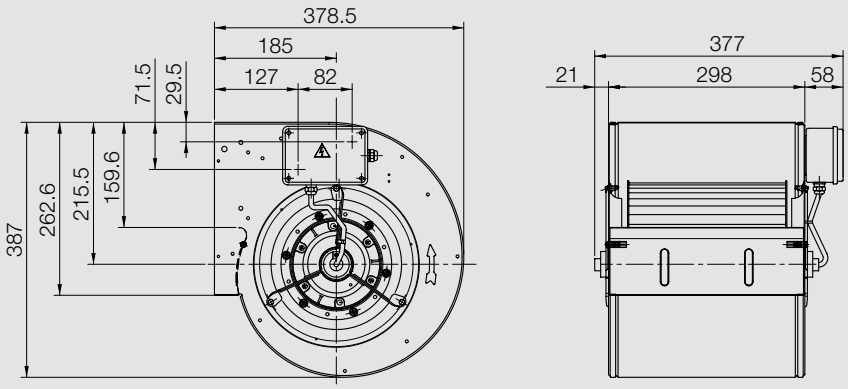

DDM 9/9 E6G3501 1F 4P 1V +SCT

DE WIT ventilatoren

Technical Data

DDM 9/9 E6G3501	Speed control	Curves	Nominal motor power W	Poles –	Phases	Connection	Mains frequency Hz	Max. power consumption W	Max. current consumption A	Speed 1/min
1F 4P 1V +SCT	*	[B1/B2]	60	2	1~		50/60	170	0.7	2500

Technical Data

DDM 9/9 E6G3501	Operating Capacitor µF	Nominal capacitor voltage V	Motor protection class	Motor thermal class	Thermal protection	Media Temperature max. °C	Fan weight kg	Density of media kg/m³	Installation type (ISO 5801)	Article number
1F 4P 1V +SCT	4	450	IP32	B	INT	40	5	1.2	B	6M02097

(1) = Speed controllable via Transformer
(2) = Speed controllable via TRIAC or Transformer
(3) = Speed controllable via Inverter
* = No speed control available
[HI] High speed, [ME] Medium speed, [LO] Low speed

Attention! We suggest to do not use the fan in the grey marked area! The noise ratings given in the performance curves are sound power level L_{WA7}, see „Technical Description“.

Curves

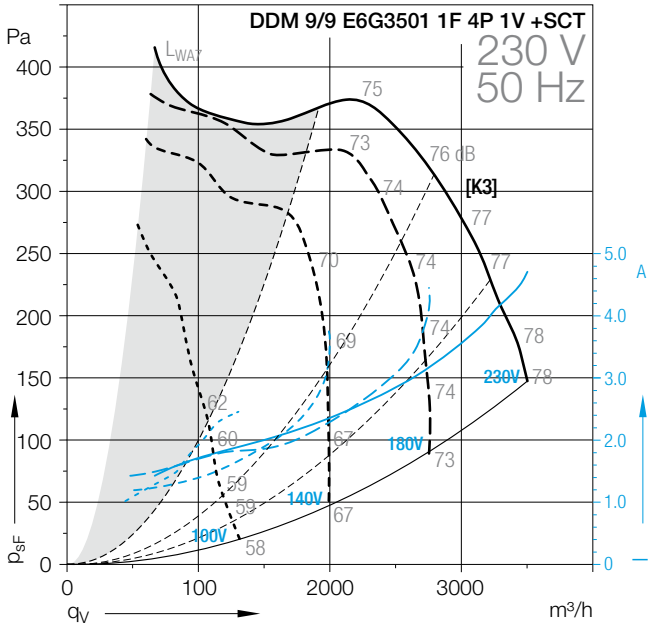

Dimensions in mm, Subject to change.

DDM 9/9 E6G3501 1F 4P 1V +SCT

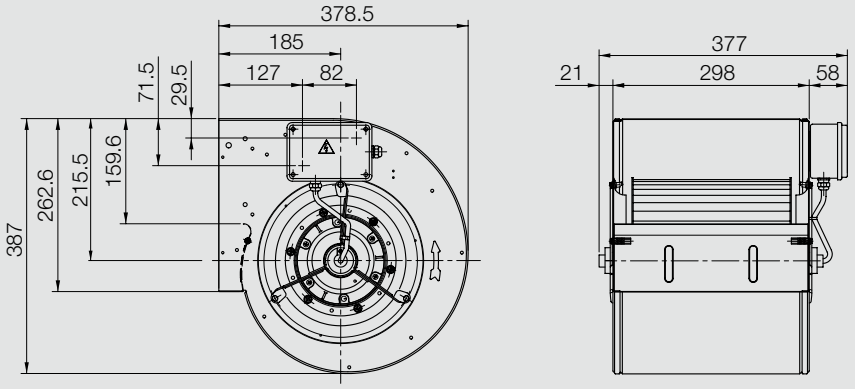

DDM 9/9 E6G2503 1F 4P 1V

DE WIT ventilatoren

Technical Data

DDM 9/9 E6G2503	Speed control	Curves	Nominal motor power W	Poles –	Phases	Connection	Mains frequency Hz	Max. power consumption W	Max. current consumption A	Speed 1/min
1F 4P 1V	(2)	[K5/K6]	550	4	1~		50/60	1611	6.8	1400

Technical Data

DDM 9/9 E6G2503	Operating Capacitor µF	Nominal capacitor voltage V	Motor protection class	Motor thermal class	Thermal protection	Media Temperature max. °C	Fan weight kg	Density of media kg/m³	Installation type (ISO 5801)	Article number
1F 4P 1V	20	450	IP10	F	EXT	40	17	1.2	B	6M02R8

(1) = Speed controllable via Transformer
(2) = Speed controllable via TRIAC or Transformer
(3) = Speed controllable via Inverter
* = No speed control available
[HI] High speed, [ME] Medium speed, [LO] Low speed

Attention! We suggest to do not use the fan in the grey marked area! The noise ratings given in the performance curves are sound power level L_{WA7}, see „Technical Description“.

Curves

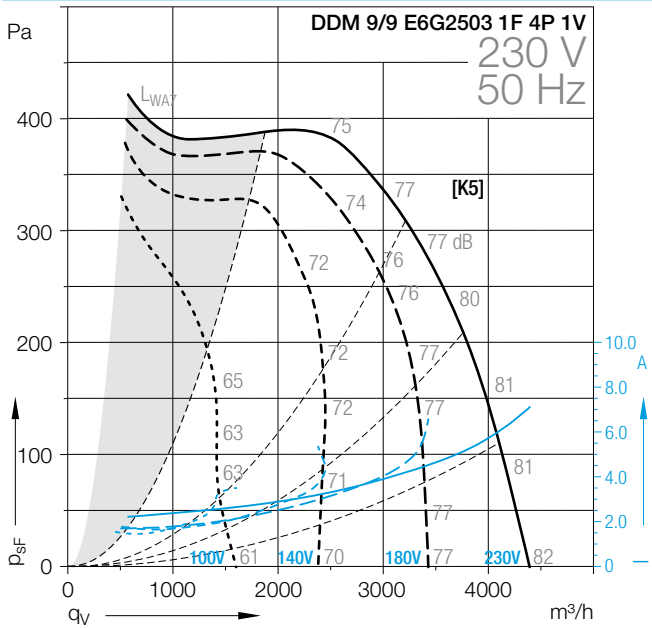

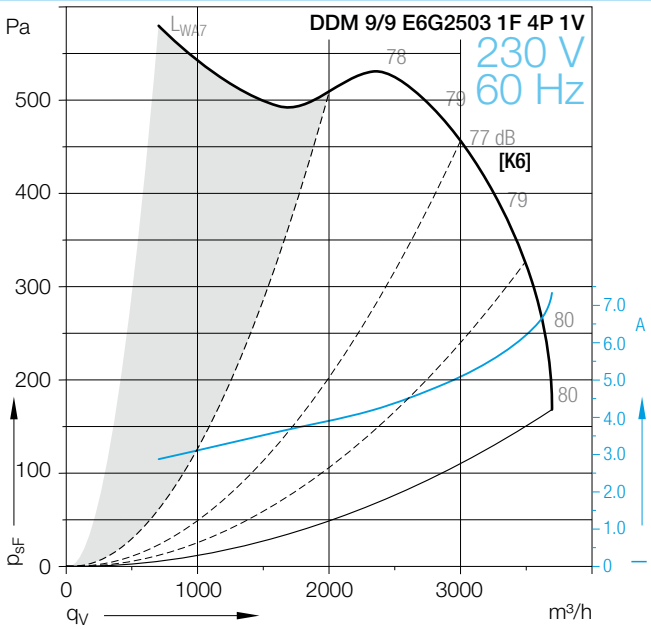

Dimensions in mm, Subject to change.

DDM 9/9 E6G2503 1F 4P 1V +SCT

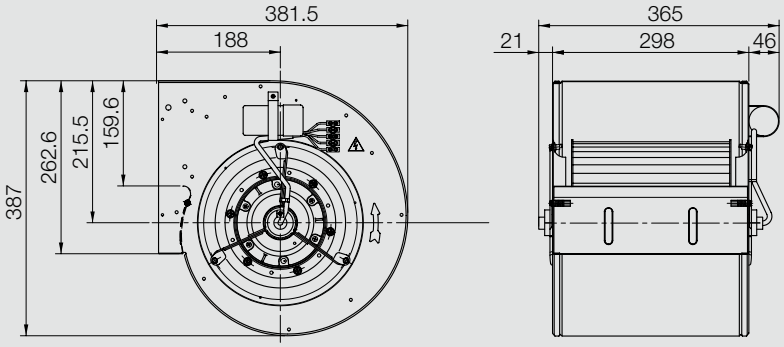

DDM 9/9 E6G3405 1F 4P 1V +SCT

DE WIT ventilatoren

Technical Data

DDM 9/9 E6G3405	Speed control	Curves	Nominal motor power W	Poles –	Phases	Connection	Mains frequency Hz	Max. power consumption W	Max. current consumption A	Speed 1/min
1F 4P 1V +SCT	(2)	[K7]	420	4	1~		50	920	3.6	1320

Technical Data

DDM 9/9 E6G3405	Operating Capacitor µF	Nominal capacitor voltage V	Motor protection class	Motor thermal class	Thermal protection	Media Temperature max. °C	Fan weight kg	Density of media kg/m³	Installation type (ISO 5801)	Article number
1F 4P 1V +SCT	16	450	IP55	F	EXT	40	17	1.2	B	6M02XN

(1) = Speed controllable via Transformer
(2) = Speed controllable via TRIAC or Transformer
(3) = Speed controllable via Inverter
* = No speed control available
[HI] High speed, [ME] Medium speed, [LO] Low speed

Attention! We suggest to do not use the fan in the grey marked area! The noise ratings given in the performance curves are sound power level L_{WA7}, see „Technical Description“.

Curves

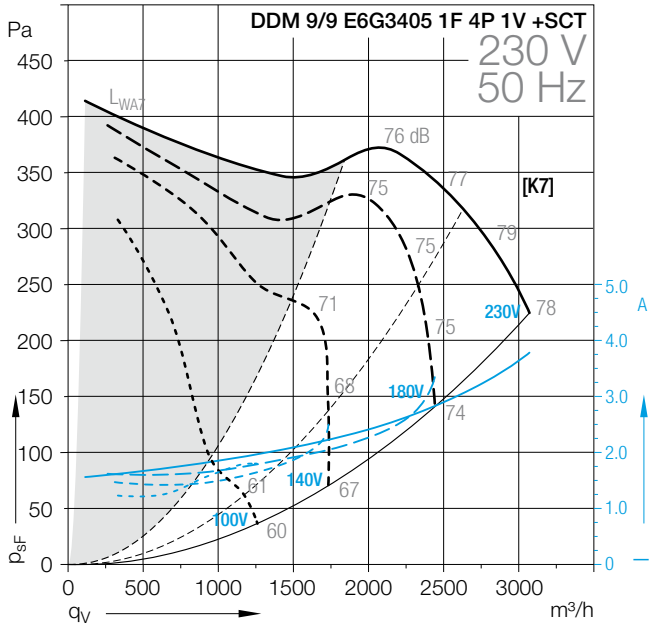

Dimensions in mm, Subject to change.

DDM 9/9 E6G3405 1F 4P 1V +SCT

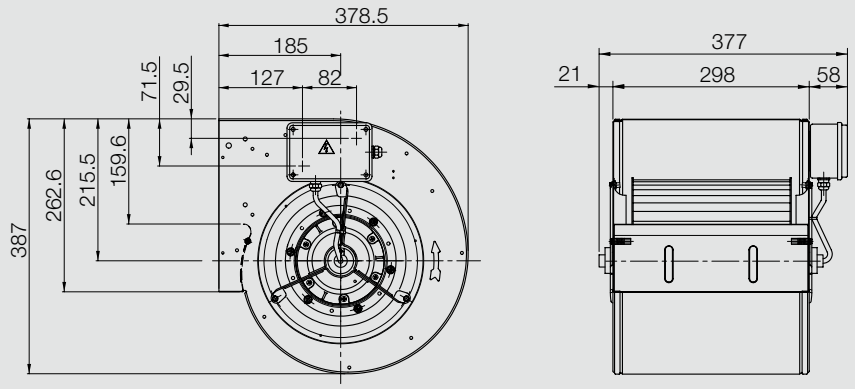

DDM 9/9 E6G3304 1F 4P 1V +SCT

DE WIT ventilatoren

Technical Data

DDM 9/9 E6G3304	Speed control	Curves	Nominal motor power W	Poles –	Phases	Connection	Mains frequency Hz	Max. power consumption W	Max. current consumption A	Speed 1/min
1F 4P 1V +SCT	(2)	[K9]	300	4	1~		50	354	2.5	1260

Technical Data

DDM 9/9 E6G3304	Operating Capacitor µF	Nominal capacitor voltage V	Motor protection class	Motor thermal class	Thermal protection	Media Temperature max. °C	Fan weight kg	Density of media kg/m³	Installation type (ISO 5801)	Article number
1F 4P 1V +SCT	10	450	IP55	F	EXT	40	16	1.2	B	6M02K1

(1) = Speed controllable via Transformer
(2) = Speed controllable via TRIAC or Transformer
(3) = Speed controllable via Inverter
* = No speed control available
[HI] High speed, [ME] Medium speed, [LO] Low speed

Attention! We suggest to do not use the fan in the grey marked area! The noise ratings given in the performance curves are sound power level L_{WA7}, see „Technical Description“.

Curves

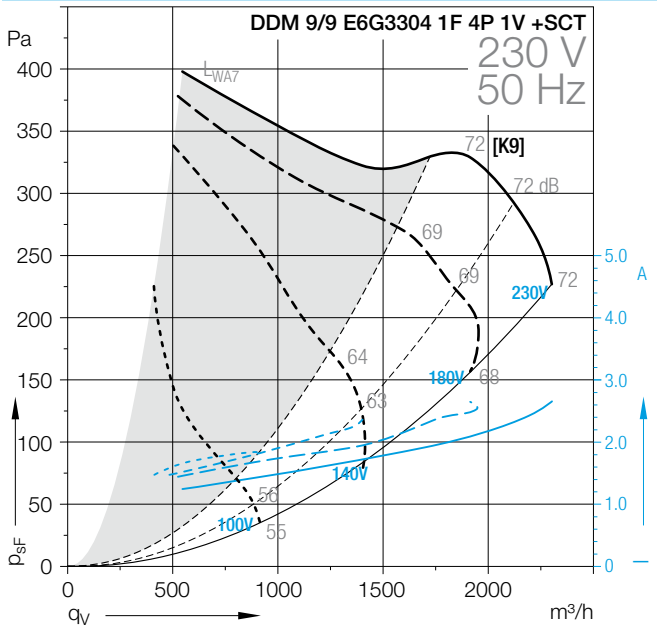

Dimensions in mm, Subject to change.

DDM 9/9 E6G3304 1F 4P 1V +SCT

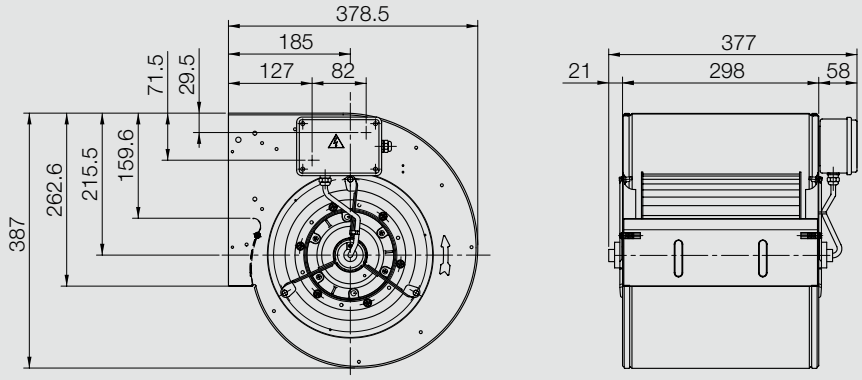

DDM 9/9 E6G3502 1F 4P 3V +SCT

DE WIT ventilatoren

Technical Data

DDM 9/9 E6G3502	Speed control	Curves	Nominal motor power W	Poles –	Phases	Connection	Mains frequency Hz	Max. power consumption W	Max. current consumption A	Speed 1/min
1F 4P 3V +SCT	*	[K11]	350	4	1~		50	734	3	1250

Technical Data

DDM 9/9 E6G3502	Operating Capacitor µF	Nominal capacitor voltage V	Motor protection class	Motor thermal class	Thermal protection	Media Temperature max. °C	Fan weight kg	Density of media kg/m³	Installation type (ISO 5801)	Article number
1F 4P 3V +SCT	12.5	450	IP55	F	EXT	40	16	1.2	B	6M02W0

(1) = Speed controllable via Transformer
(2) = Speed controllable via TRIAC or Transformer
(3) = Speed controllable via Inverter
* = No speed control available
[HI] High speed, [ME] Medium speed, [LO] Low speed

Attention! We suggest to do not use the fan in the grey marked area! The noise ratings given in the performance curves are sound power level L_{WA7}, see „Technical Description“.

Curves

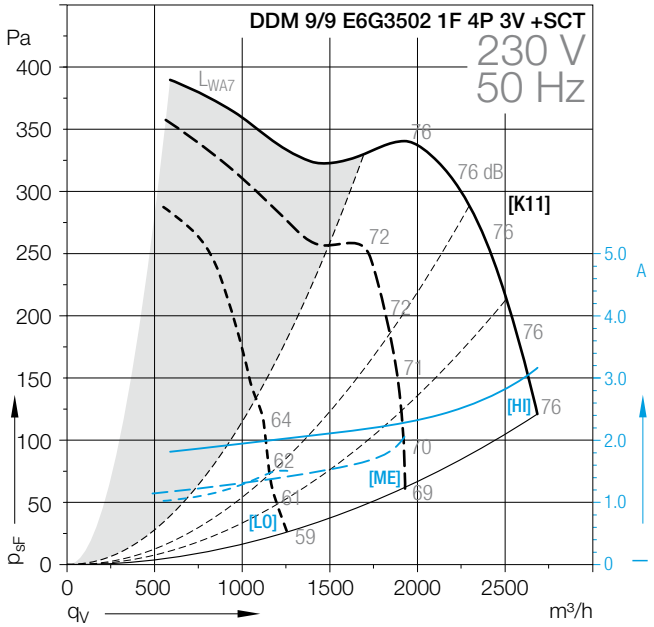

Dimensions in mm, Subject to change.

DDM 9/9 E6G3502 1F 4P 3V +SCT

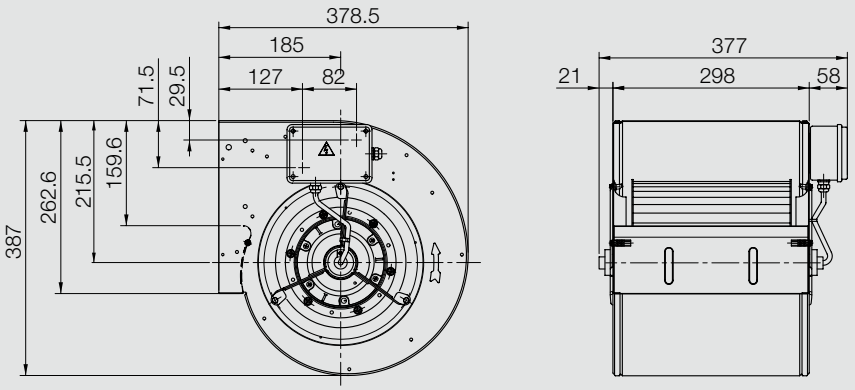

DDM 9/9 E6G2505 1F 4P 3V

DE WIT ventilatoren

Technical Data

DDM 9/9 E6G2505	Speed control	Curves	Nominal motor power W	Poles –	Phases	Connection	Mains frequency Hz	Max. power consumption W	Max. current consumption A	Speed 1/min
1F 4P 3V	*	[K13/K14]	550	4	1~		50/60	1644	7.1	1400

Technical Data

DDM 9/9 E6G2505	Operating Capacitor µF	Nominal capacitor voltage V	Motor protection class	Motor thermal class	Thermal protection	Media Temperature max. °C	Fan weight kg	Density of media kg/m³	Installation type (ISO 5801)	Article number
1F 4P 3V	25	450	IP10	F	EXT	40	18	1.2	B	6M02007

(1) = Speed controllable via Transformer
(2) = Speed controllable via TRIAC or Transformer
(3) = Speed controllable via Inverter
* = No speed control available
[HI] High speed, [ME] Medium speed, [LO] Low speed

Attention! We suggest to do not use the fan in the grey marked area! The noise ratings given in the performance curves are sound power level L_{WA7}, see „Technical Description“.

Curves

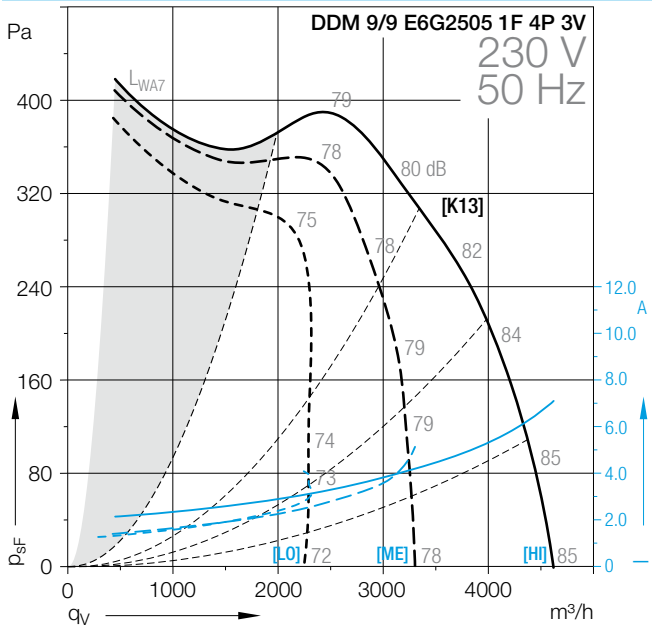

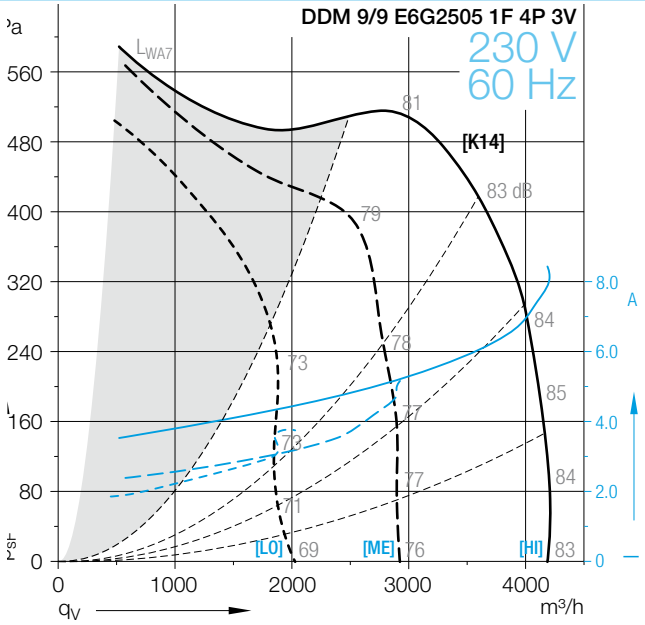

Dimensions in mm, Subject to change.

DDM 9/9 E6G2505 1F 4P 3V

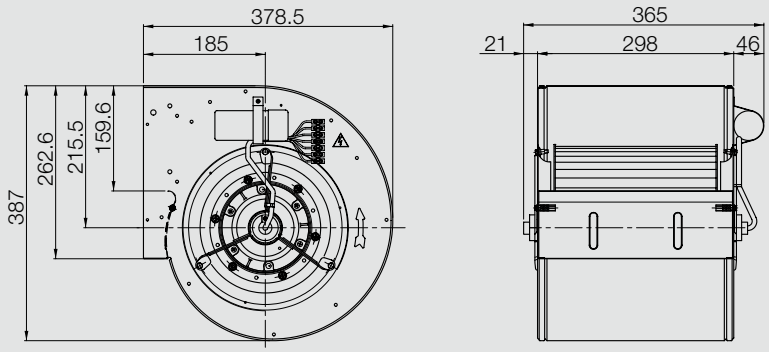

DDM 9/9 E6G3603 3F 4P 1V +SCT

DE WIT ventilatoren

Technical Data

DDM 9/9 E6G3603	Speed control	Curves	Nominal motor power W	Poles –	Phases	Connection	Mains frequency Hz	Max. power consumption W	Max. current consumption A	Speed 1/min
3F 4P 1V +SCT	*	[K15/K16]	550	4	3~	Δ/Y	50/60	1482	2.5	1410

Technical Data

DDM 9/9 E6G3603	Operating Capacitor µF	Nominal capacitor voltage V	Motor protection class	Motor thermal class	Thermal protection	Media Temperature max. °C	Fan weight kg	Density of media kg/m³	Installation type (ISO 5801)	Article number
3F 4P 1V +SCT			IP55	F	EXT	40	16	1.2	B	6M028A

(1) = Speed controllable via Transformer
(2) = Speed controllable via TRIAC or Transformer
(3) = Speed controllable via Inverter
* = No speed control available
[HI] High speed, [ME] Medium speed, [LO] Low speed

Attention! We suggest to do not use the fan in the grey marked area! The noise ratings given in the performance curves are sound power level L_{WA7}, see „Technical Description“.

Curves

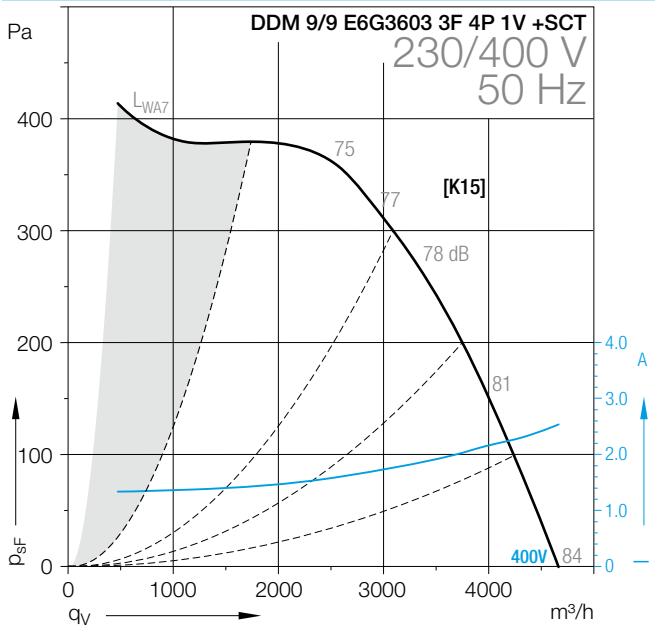

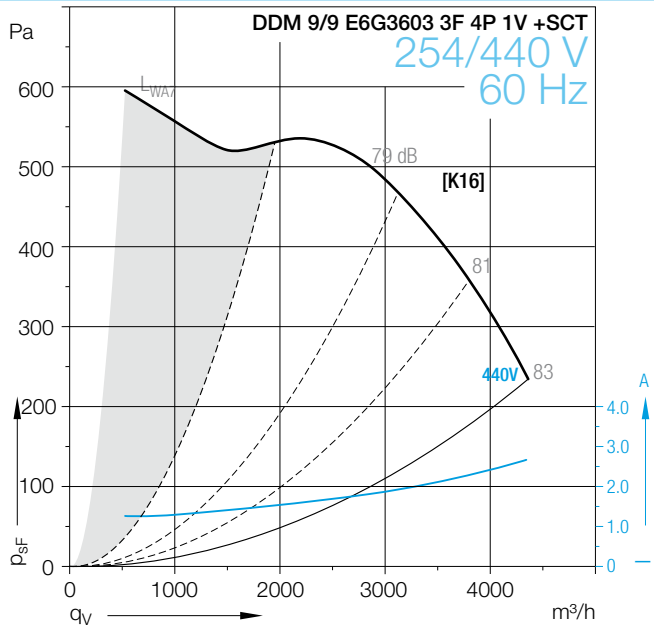

Dimensions in mm, Subject to change.

DDM 9/9 E6G3603 3F 4P 1V +SCT

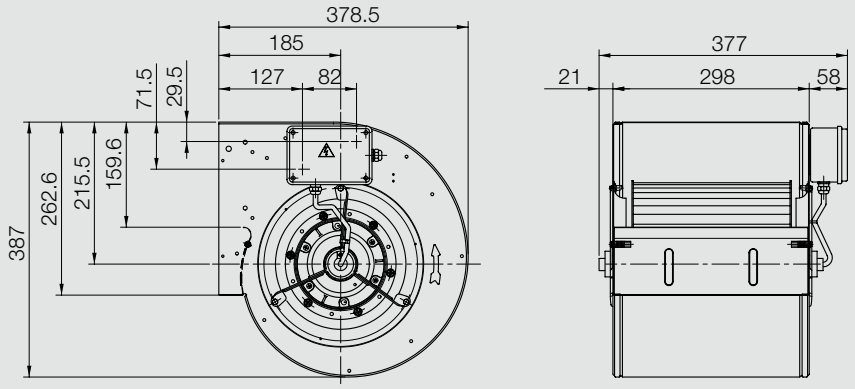

DDM 9/9 E6G3402 1F 6P 1V +SCT

DE WIT ventilatoren

Technical Data

DDM 9/9 E6G3402	Speed control	Curves	Nominal motor power W	Poles –	Phases	Connection	Mains frequency Hz	Max. power consumption W	Max. current consumption A	Speed 1/min
1F 6P 1V +SCT	(2)	[K17/K18]	250	6	1~		50/60	486	2.2	800

Technical Data

DDM 9/9 E6G3402	Operating Capacitor µF	Nominal capacitor voltage V	Motor protection class	Motor thermal class	Thermal protection	Media Temperature max. °C	Fan weight kg	Density of media kg/m³	Installation type (ISO 5801)	Article number
1F 6P 1V +SCT	12.5	450	IP55	F	EXT	70	16	1.2	B	6M02NM

(1) = Speed controllable via Transformer
(2) = Speed controllable via TRIAC or Transformer
(3) = Speed controllable via Inverter
* = No speed control available
[HI] High speed, [ME] Medium speed, [LO] Low speed

Attention! We suggest to do not use the fan in the grey marked area! The noise ratings given in the performance curves are sound power level L_{WA7}, see „Technical Description“.

Curves

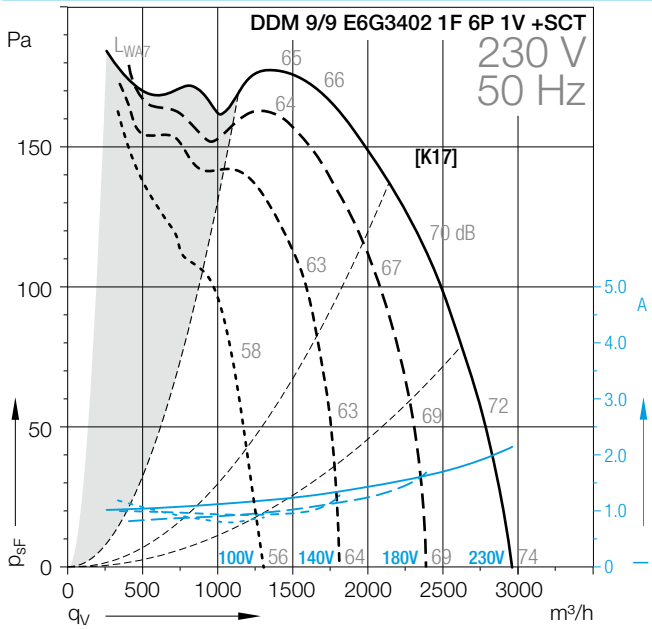

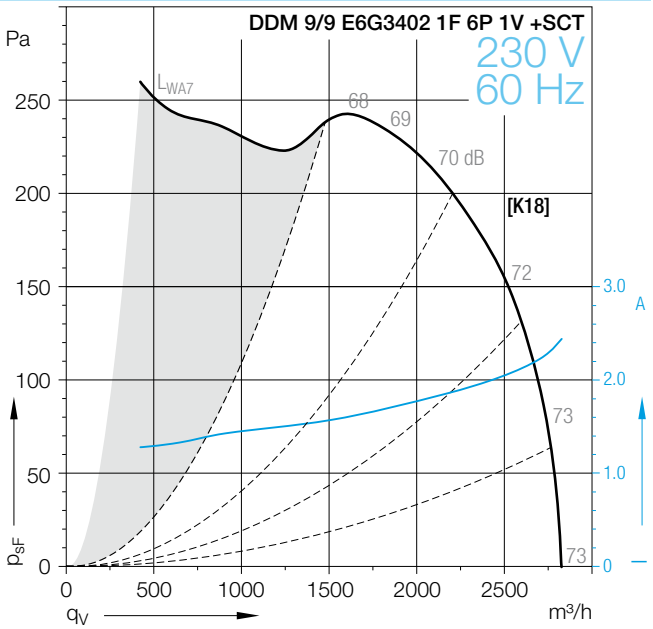

Dimensions in mm, Subject to change.

DDM 9/9 E6G3402 1F 6P 1V +SCT

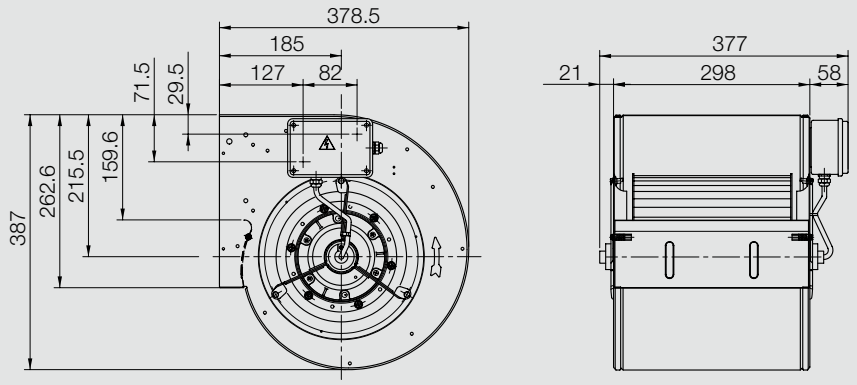

DDM 9/9 E6G3303 1F 6P 1V +SCT

DE WIT ventilatoren

Technical Data

DDM 9/9 E6G3303	Speed control	Curves	Nominal motor power W	Poles –	Phases	Connection	Mains frequency Hz	Max. power consumption W	Max. current consumption A	Speed 1/min
1F 6P 1V +SCT	(2)	[K19/K20]	200	6	1~		50/60	407	1.8	840

Technical Data

DDM 9/9 E6G3303	Operating Capacitor µF	Nominal capacitor voltage V	Motor protection class	Motor thermal class	Thermal protection	Media Temperature max. °C	Fan weight kg	Density of media kg/m³	Installation type (ISO 5801)	Article number
1F 6P 1V +SCT	8	450	IP55	F	EXT	60	16	1.2	B	6M02M2

(1) = Speed controllable via Transformer
(2) = Speed controllable via TRIAC or Transformer
(3) = Speed controllable via Inverter
* = No speed control available
[HI] High speed, [ME] Medium speed, [LO] Low speed

Attention! We suggest to do not use the fan in the grey marked area! The noise ratings given in the performance curves are sound power level L_{WA7}, see „Technical Description“.

Curves

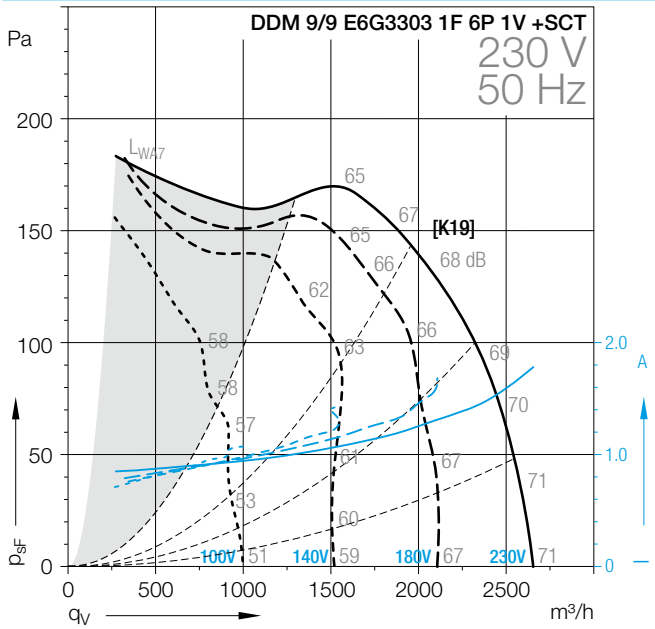

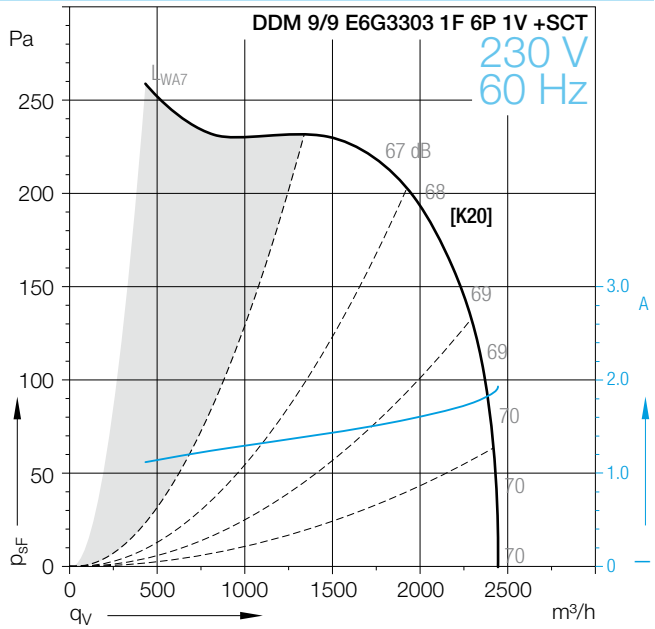

Dimensions in mm, Subject to change.

DDM 9/9 E6G3303 1F 6P 1V +SCT

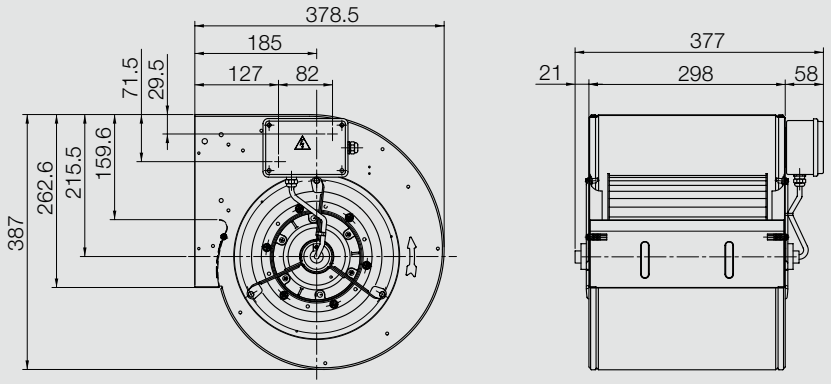

DDM 9/9 E6G3306 1F 6P 3V +SCT

DE WIT ventilatoren

Technical Data

DDM 9/9 E6G3306	Speed control	Curves	Nominal motor power W	Poles –	Phases	Connection	Mains frequency Hz	Max. power consumption W	Max. current consumption A	Speed 1/min
1F 6P 3V +SCT	*	[K21/K22]	200	6	1~		50/60	478	2	830

Technical Data

DDM 9/9 E6G3306	Operating Capacitor µF	Nominal capacitor voltage V	Motor protection class	Motor thermal class	Thermal protection	Media Temperature max. °C	Fan weight kg	Density of media kg/m³	Installation type (ISO 5801)	Article number
1F 6P 3V +SCT	10	450	IP44	F	EXT	40	14	1.2	B	6M02WU

(1) = Speed controllable via Transformer
(2) = Speed controllable via TRIAC or Transformer
(3) = Speed controllable via Inverter
* = No speed control available
[HI] High speed, [ME] Medium speed, [LO] Low speed

Attention! We suggest to do not use the fan in the grey marked area! The noise ratings given in the performance curves are sound power level L_{WA7}, see „Technical Description“.

Curves

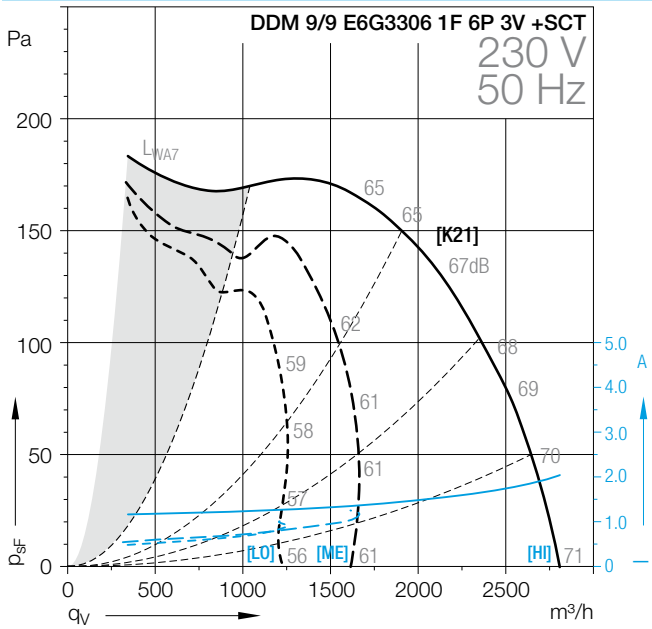

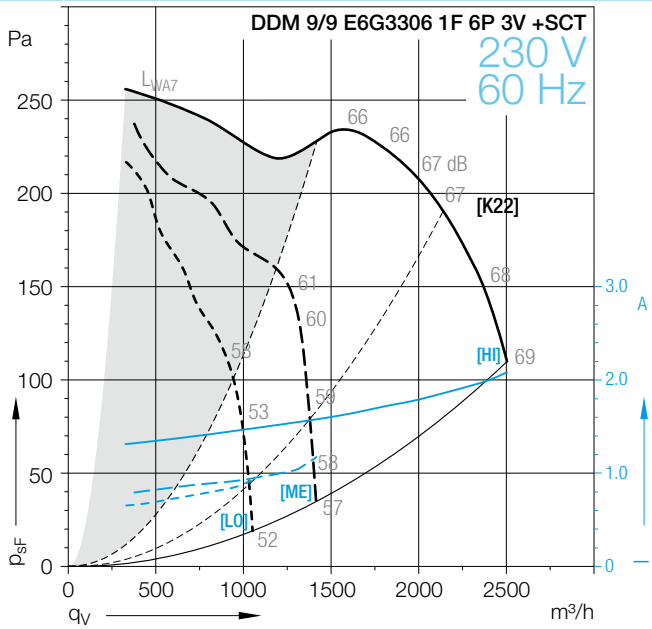

Dimensions in mm, Subject to change.

DDM 9/9 E6G3306 1F 4P 3V +SCT

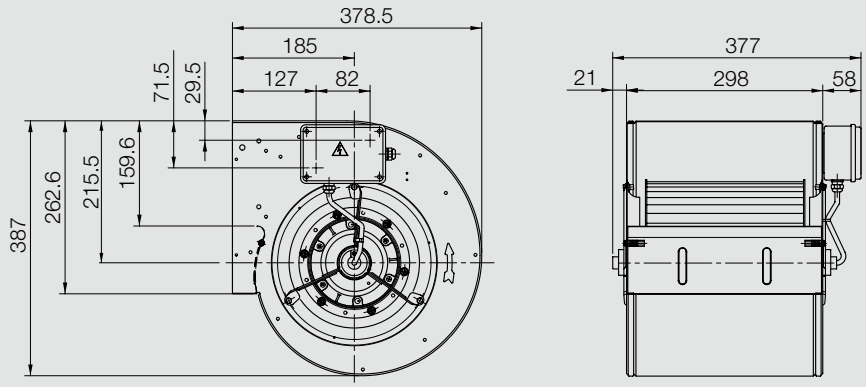

DDM 9/9 E6G3403 3F 6P 1V +SCT

DE WIT ventilatoren

Technical Data

DDM 9/9 E6G3403	Speed control	Curves	Nominal motor power W	Poles –	Phases	Connection	Mains frequency Hz	Max. power consumption W	Max. current consumption A	Speed 1/min
3F 6P 1V +SCT	*	[K23/K24]	245	6	3~	Δ/Y	50/60	552	1.2	870

Technical Data

DDM 9/9 E6G3403	Operating Capacitor µF	Nominal capacitor voltage V	Motor protection class	Motor thermal class	Thermal protection	Media Temperature max. °C	Fan weight kg	Density of media kg/m³	Installation type (ISO 5801)	Article number
3F 6P 1V +SCT			IP44	F	EXT	40	19	1.2	B	6M02G2

(1) = Speed controllable via Transformer
(2) = Speed controllable via TRIAC or Transformer
(3) = Speed controllable via Inverter
* = No speed control available
[HI] High speed, [ME] Medium speed, [LO] Low speed

Attention! We suggest to do not use the fan in the grey marked area! The noise ratings given in the performance curves are sound power level L_{WA7}, see „Technical Description“.

Curves

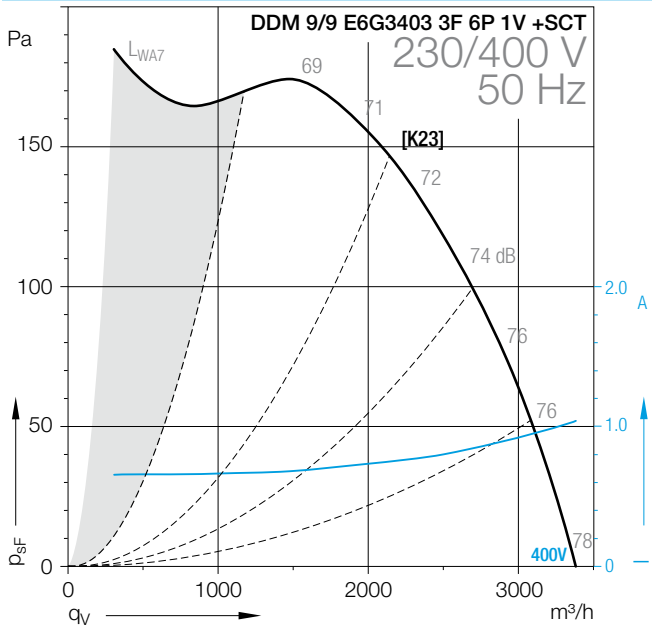

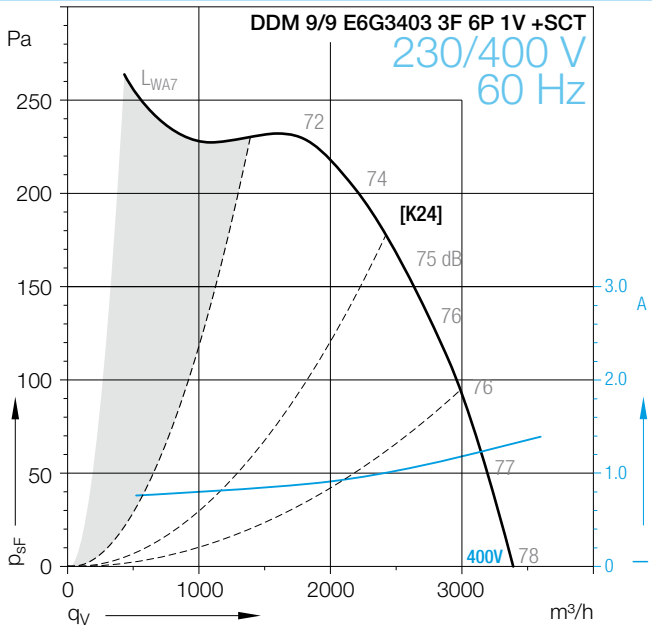

Dimensions in mm, Subject to change.

DDM 9/9 E6G3403 3F 6P 1V +SCT

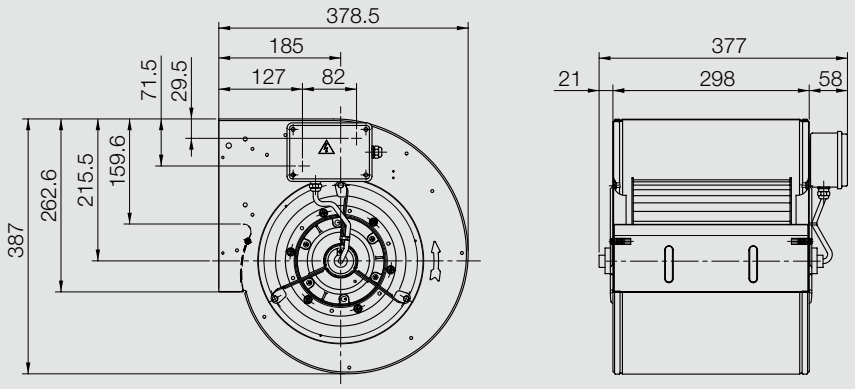

DDM 9/9 TIGHT E6G3405 1F 4P 1V +SCT

DE WIT ventilatoren

Technical Data

DDM 9/9 TIGHT E6G3405	Speed control	Curves	Nominal motor power W	Poles –	Phases	Connection	Mains frequency Hz	Max. power consumption W	Max. current consumption A	Speed 1/min
1F 4P 1V +SCT	(2)	[L1]	420	4	1~		50	865	3.8	1320

Technical Data

DDM 9/9 TIGHT E6G3405	Operating Capacitor µF	Nominal capacitor voltage V	Motor protection class	Motor thermal class	Thermal protection	Media Temperature max. °C	Fan weight kg	Density of media kg/m³	Installation type (ISO 5801)	Article number
1F 4P 1V +SCT	16	450	IP55	F	EXT	40	15	1.2	B	6M02L8

(1) = Speed controllable via Transformer
(2) = Speed controllable via TRIAC or Transformer
(3) = Speed controllable via Inverter
* = No speed control available
[HI] High speed, [ME] Medium speed, [LO] Low speed

Attention! We suggest to do not use the fan in the grey marked area! The noise ratings given in the performance curves are sound power level L_{WA7}, see „Technical Description“.

Curves

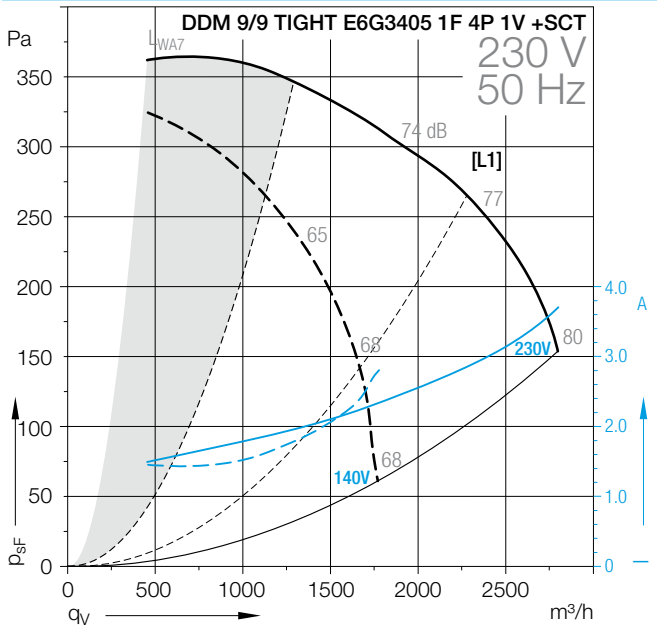

Dimensions in mm, Subject to change.
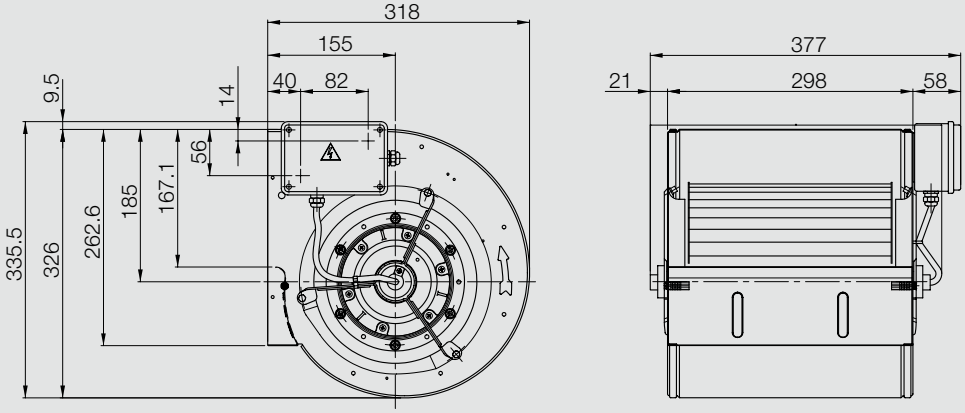
DDM 9/9 TIGHT E6G3405 1F 4P 1V +SCT