Order line: 10

Specification of: RQM F3-5056-BI-WT-M

Direct driven high-performance centrifugal fan RQM MultiEvo with Ultra-Premium permanent magnet motor at the efficiency level of the efficiency class IE5 and integrated drive (VFD).
Complete assembly module with highest system efficiency, specifically designed and optimized for use in air handling units. Multi volute flow guiding device of galvanized sheet steel to increase pressure and static fan efficiency. Newly developed high performance impeller with optimized shape and highest efficiency, comprising six backward curved hollow section true aerofoil blades with real turbulence profile and rounded, inclined blade leading edges from impeller shroud to back plate, for optimal impact over the entire width of the blade. Aerodynamically and acoustically optimized with highest static efficiencies. Impeller made of high tensile sheet steel in an automated manufacturing process, robotic welding, degreased, iron phosphated and coated with a high quality epoxy-polyester mixed powder, fastened with a clamping bush to the shaft of the foot motor, balanced statically and dynamically according to DIN ISO 21940-11, specification G 2,5, based on the maximum speed. System inlet cone made of galvanized sheet steel for optimal inflow to the impeller, equipped with flow measuring device IMV as a standard feature. Ultra premium motor with highly efficient permanent magnet technology and efficiency class IE5. Motor magnets without rare earth metals. Integrated drive (VFD), mounted on the motor support plate, optimally coordinated with the high performance impeller. Drive (VFD) preprogrammed, immediately ready for operation with signal 0 to 10 V. With Modbus interface. No shielded connection cable necessary. The drive system is 100 % speed controllable. Prepared for easy floor, wall or ceiling mounting on inlet side. For operation with any arrangement of the axes. Performance data to DIN 24166 Class 1 (BS 848 Class "A")

Fan curve to RQM F3/F6-5056-BI-WT-M

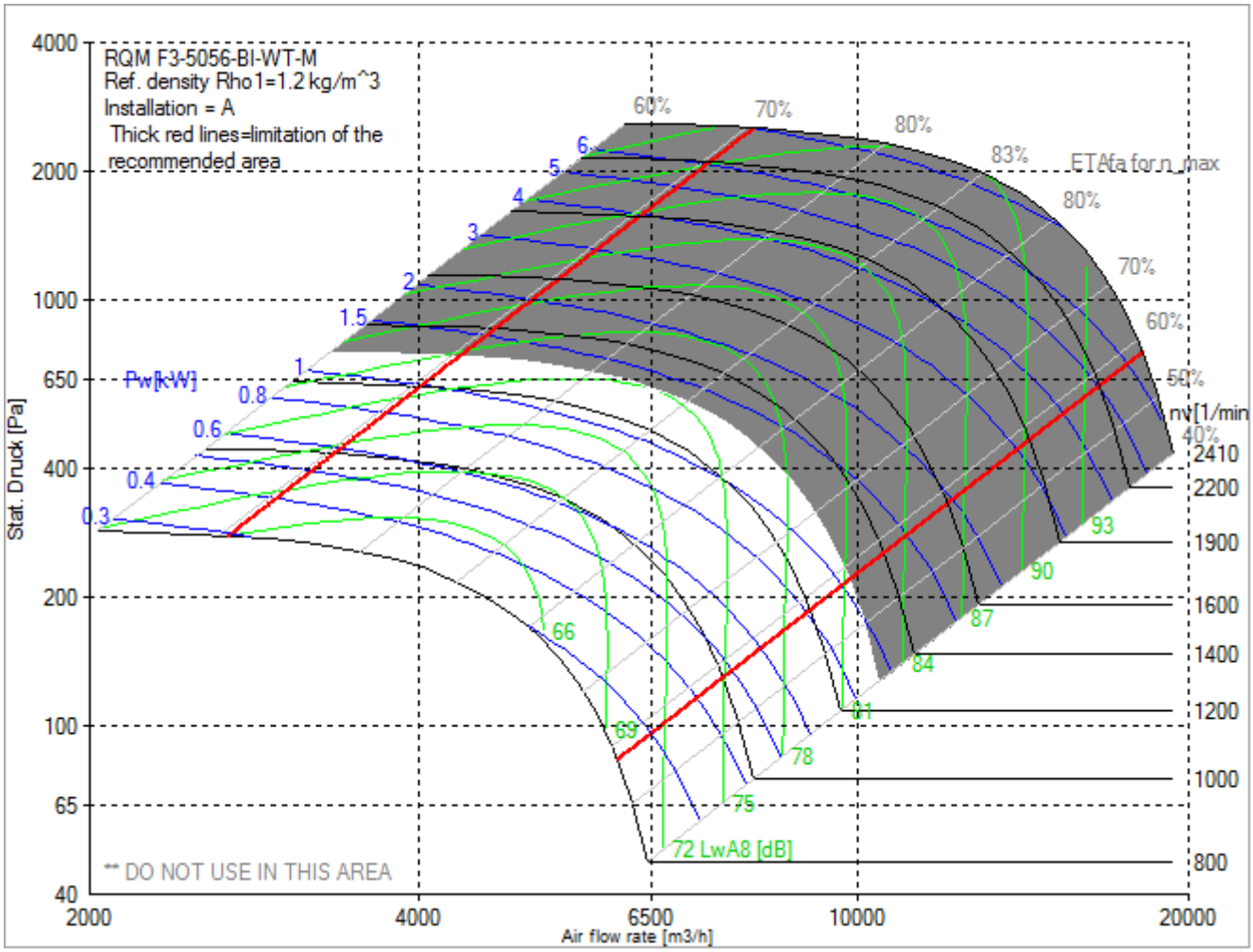

NICOTRA Gebhardt

DE WIT ventilatoren

Technical data of the fan: RQM F3-5056-BI-WT-M

fulfills the ErP requirements 2015

Description	Value	Dimension
Specified duty point		
Design duty point		
Installation acc. DIN 24163 Part 1	A	
Reference density (Rho1)	1.20	kg/m³
Medium temperature (t)	20	C
Fan weight	102	kg
Feed data		
Main's frequency (f_N)	50/60	Hz
Voltage (U_N)	3~ 380-480	V
Rated motor data		
Phases-Voltage-Frequency	3~400-158	V-Hz
Frame size-No of poles:	150-70 / IE5-10	
Power (P_N)	2.8	kW
Speed (n_N	1900	min^{-1}
Current (I_N)	7,0	A
operational limits		
Max. fan speed (n_{vmax})	1300	min^{-1}
Max. operating frequency (f_{max})	109	Hz
Temperature range for conveying medium (t_{min} ...t_{max})	-20...40	C
ErP-Data at best efficiency and density - kg/m^3		
measurement- / efficiency category	A / static	
design status of VSD	VSD is integrated	
overall efficiency (ETA_{opt})	78.2	%
achieved efficiency grade (N_{ist})	87.0	
required efficiency grade in 2013 / 2015 (N)	58 / 61	
Air flow rate (V_{opt})	7021	m³/h
pressure rise (dp_{opt})	577	Pa
Fan speed (n_{vopt})	1300	min^{-1}
motor power input (P_{1opt})	1.44	kW
specific ratio (d_{dpopt})	1.006	

Dimensions to RQM F3-5056-BI-WT-M

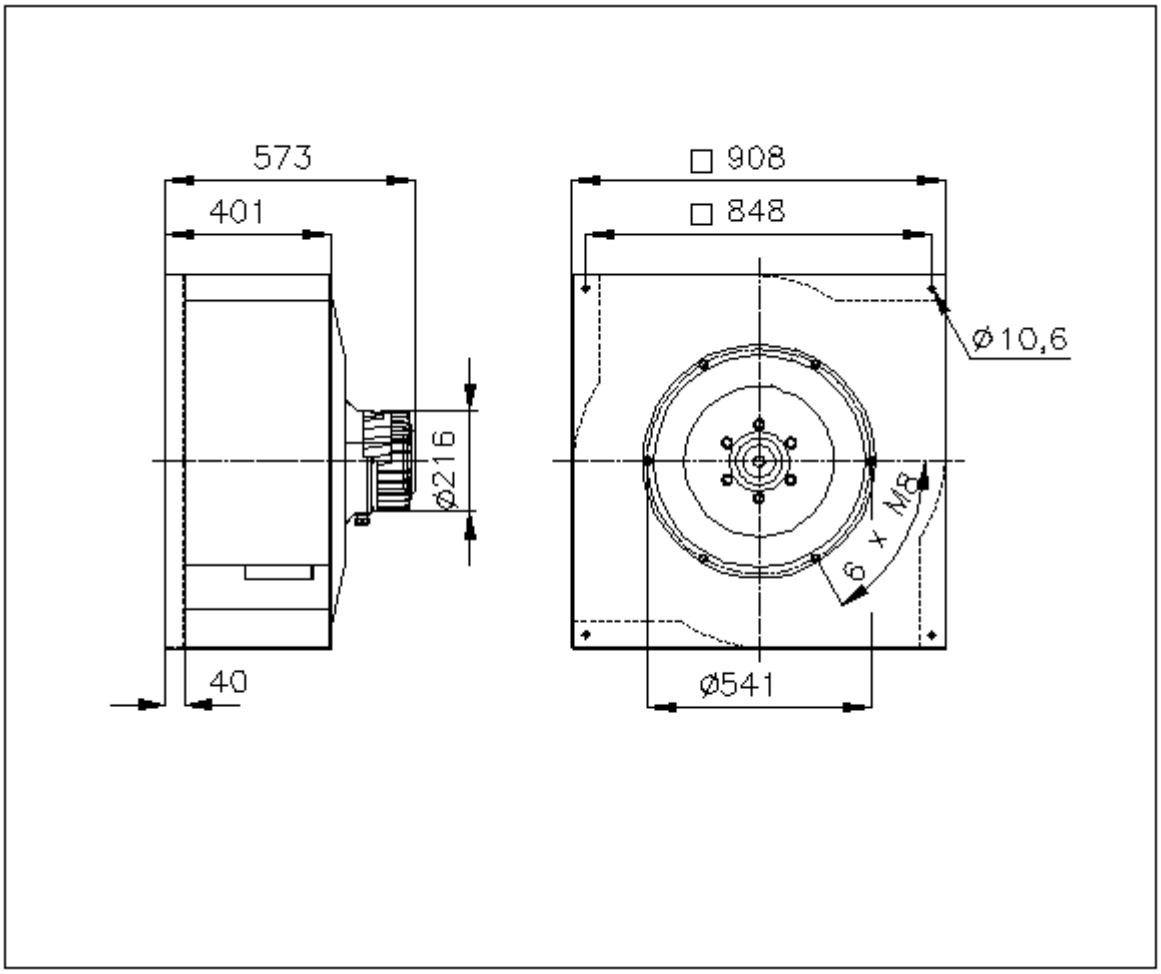

Rotation:	RD
Handing:	90

NICOTRA Gebhardt

DE WIT ventilatoren

Technical data of the fan: RQM F6-5056-BI-WT-M

fulfills the ErP requirements 2015

Description	Value	Dimension
Specified duty point		
Design duty point		
Installation acc. DIN 24163 Part 1	A	
Reference density (Rho1)	1.20	kg/m³
Medium temperature (t)	20	C
Fan weight	111	kg
Feed data		
Main's frequency (f_N)	50/60	Hz
Voltage (U_N)	3~ 380-480	V
Rated motor data		
Phases-Voltage-Frequency	3~400-158	V-Hz
Frame size-No of poles:	150-70 / IE5-10	
Power (P_N)	2.8	kW
Speed (n_N	1900	min^{-1}
Current (I_N)	7,0	A
operational limits		
Max. fan speed (n_{vmax})	1300	min^{-1}
Max. operating frequency (f_{max})	109	Hz
Temperature range for conveying medium (t_{min} ...t_{max})	-20...40	C
ErP-Data at best efficiency and density - kg/m^3		
measurement- / efficiency category	A / static	
design status of VSD	VSD is integrated	
overall efficiency (ETA_{opt})	78.2	%
achieved efficiency grade (N_{ist})	87.0	
required efficiency grade in 2013 / 2015 (N)	58 / 61	
Air flow rate (V_{opt})	7021	m³/h
pressure rise (dp_{opt})	577	Pa
Fan speed (n_{vopt})	1300	min^{-1}
motor power input (P_{1opt})	1.44	kW
specific ratio (d_{dpopt})	1.006	

Dimensions to RQM F6-5056-BI-WT-M

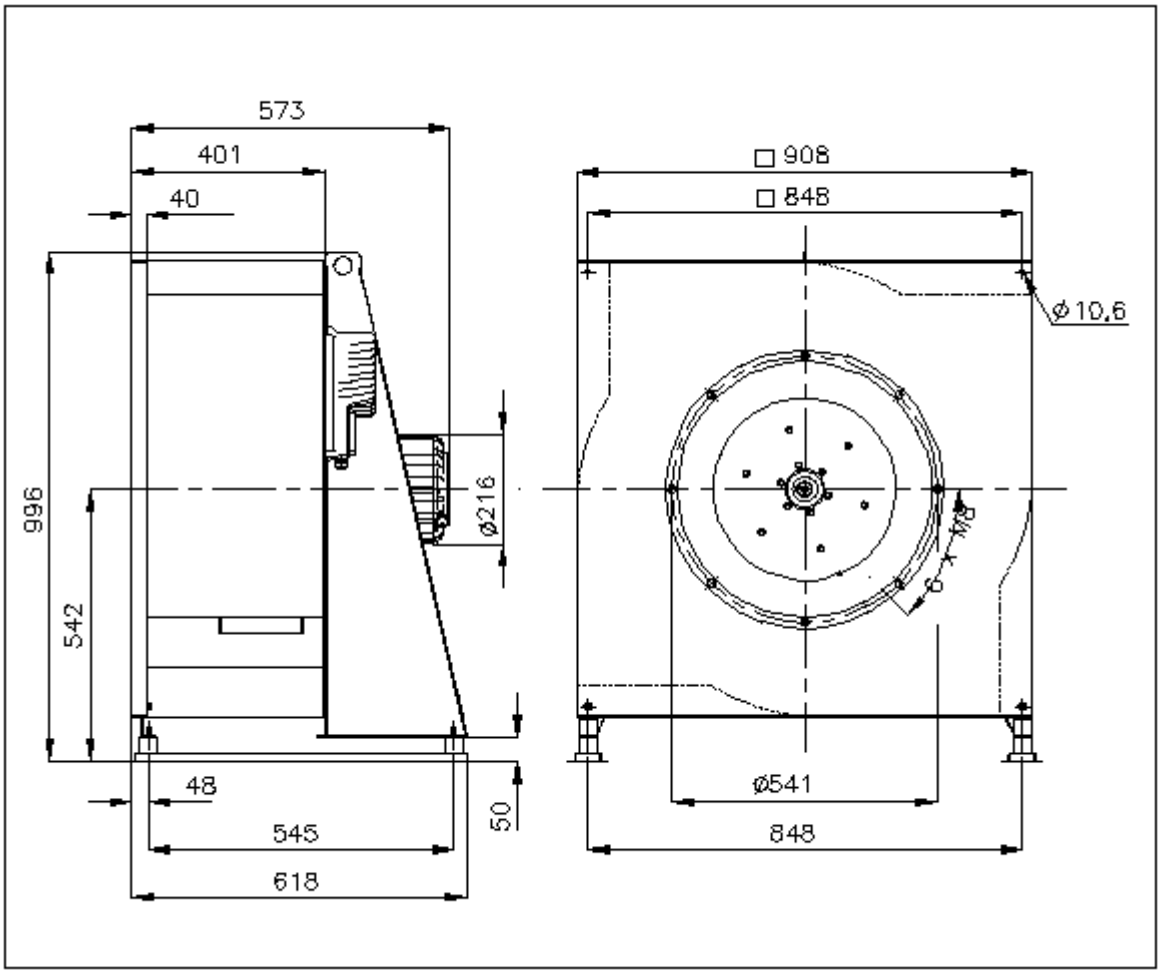

Rotation:	RD
Handing:	90

Fan curve to RQM F3/F6-5056-BI-YG-M

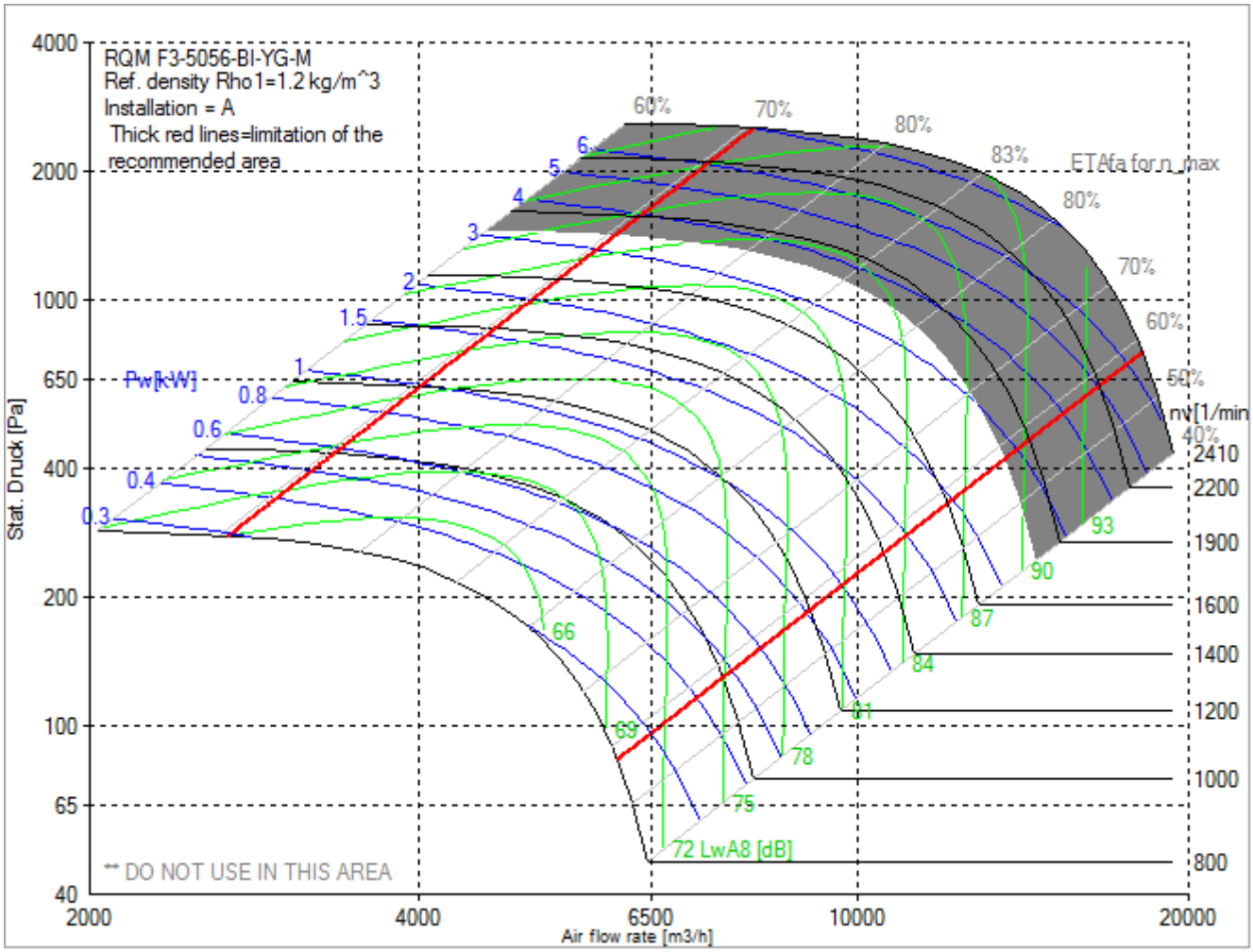

NICOTRA Gebhardt

DE WIT ventilatoren

Technical data of the fan: RQM F3-5056-BI-YG-M

fulfills the ErP requirements 2015

Description	Value	Dimension
Specified duty point		
Design duty point		
Installation acc. DIN 24163 Part 1	A	
Reference density (Rho1)	1.20	kg/m³
Medium temperature (t)	20	C
Fan weight	115	kg
Feed data		
Main's frequency (f_N)	50/60	Hz
Voltage (U_N)	3~ 380-480	V
Rated motor data		
Phases-Voltage-Frequency	3~400-142	V-Hz
Frame size-No of poles:	220-55 / IE5-10	
Power (P_N)	4.3	kW
Speed (n_N	1700	min^{-1}
Current (I_N)	10,0	A
operational limits		
Max. fan speed (n_{vmax})	1800	min^{-1}
Max. operating frequency (f_{max})	150	Hz
Temperature range for conveying medium (t_{min} ...t_{max})	-20...40	C
ErP-Data at best efficiency and density - kg/m^3		
measurement- / efficiency category	A / static	
design status of VSD	VSD is integrated	
overall efficiency (ETA_{opt})	77.3	%
achieved efficiency grade (N_{ist})	81.6	
required efficiency grade in 2013 / 2015 (N)	58 / 61	
Air flow rate (V_{opt})	9722	m³/h
pressure rise (dp_{opt})	1107	Pa
Fan speed (n_{vopt})	1800	min^{-1}
motor power input (P_{1opt})	3.87	kW
specific ratio (d_{dpopt})	1.011	

Dimensions to RQM F3-5056-BI-YG-M

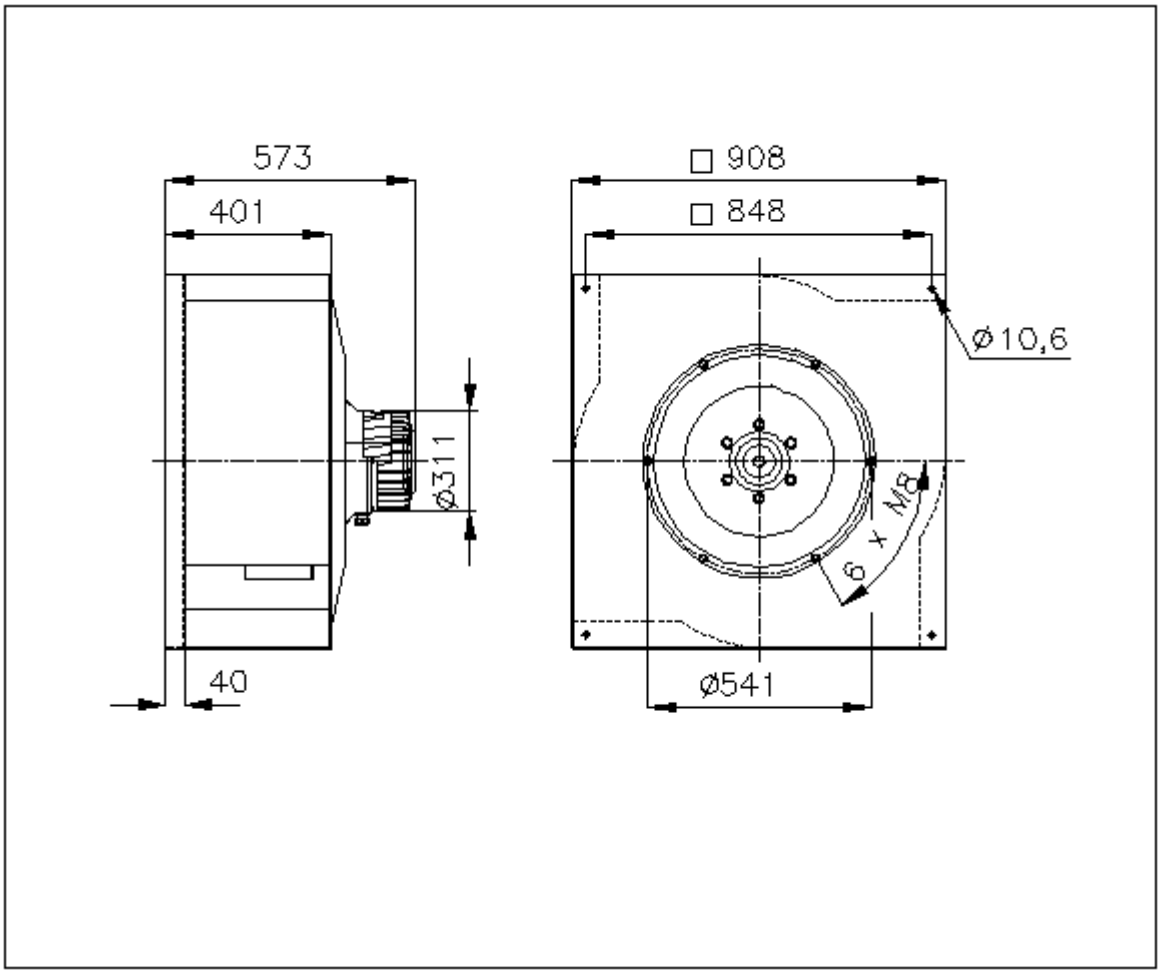

Rotation:	RD
Handing:	90

NICOTRA Gebhardt

DE WIT ventilatoren

Technical data of the fan: RQM F6-5056-BI-YG-M

fulfills the ErP requirements 2015

Description	Value	Dimension
Specified duty point		
Design duty point		
Installation acc. DIN 24163 Part 1	A	
Reference density (Rho1)	1.20	kg/m³
Medium temperature (t)	20	C
Fan weight	124	kg
Feed data		
Main's frequency (f_N)	50/60	Hz
Voltage (U_N)	3~ 380-480	V
Rated motor data		
Phases-Voltage-Frequency	3~400-142	V-Hz
Frame size-No of poles:	220-55 / IE5-10	
Power (P_N)	4.3	kW
Speed (n_N	1700	min^{-1}
Current (I_N)	10,0	A
operational limits		
Max. fan speed (n_{vmax})	1800	min^{-1}
Max. operating frequency (f_{max})	150	Hz
Temperature range for conveying medium (t_{min} ...t_{max})	-20...40	C
ErP-Data at best efficiency and density - kg/m^3		
measurement- / efficiency category	A / static	
design status of VSD	VSD is integrated	
overall efficiency (ETA_{opt})	77.3	%
achieved efficiency grade (N_{ist})	81.6	
required efficiency grade in 2013 / 2015 (N)	58 / 61	
Air flow rate (V_{opt})	9722	m³/h
pressure rise (dp_{opt})	1107	Pa
Fan speed (n_{vopt})	1800	min^{-1}
motor power input (P_{1opt})	3.87	kW
specific ratio (d_{dpopt})	1.011	

Dimensions to RQM F6-5056-BI-YG-M

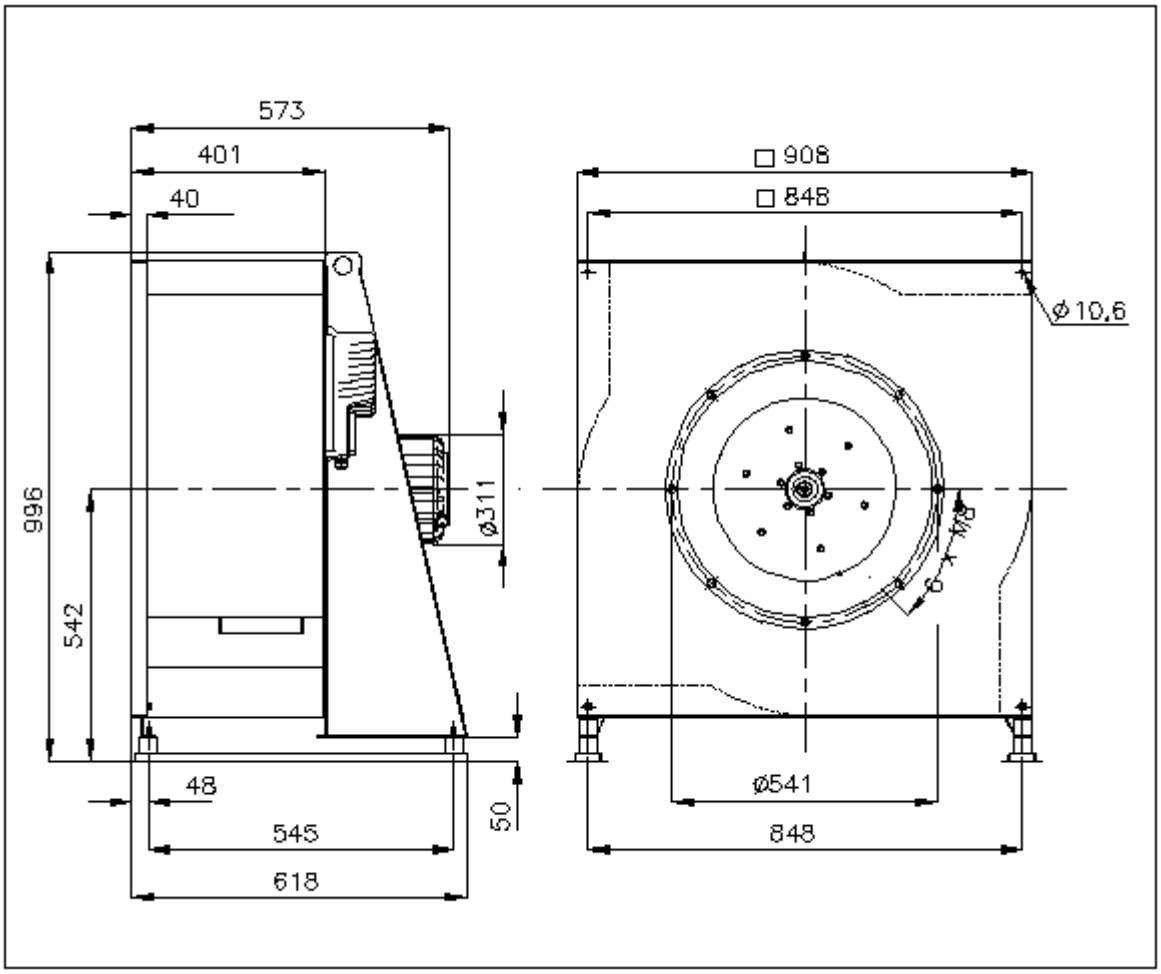

Rotation:	RD
Handing:	90

Fan curve to RQM F3/F6-5056-BI-YN-M

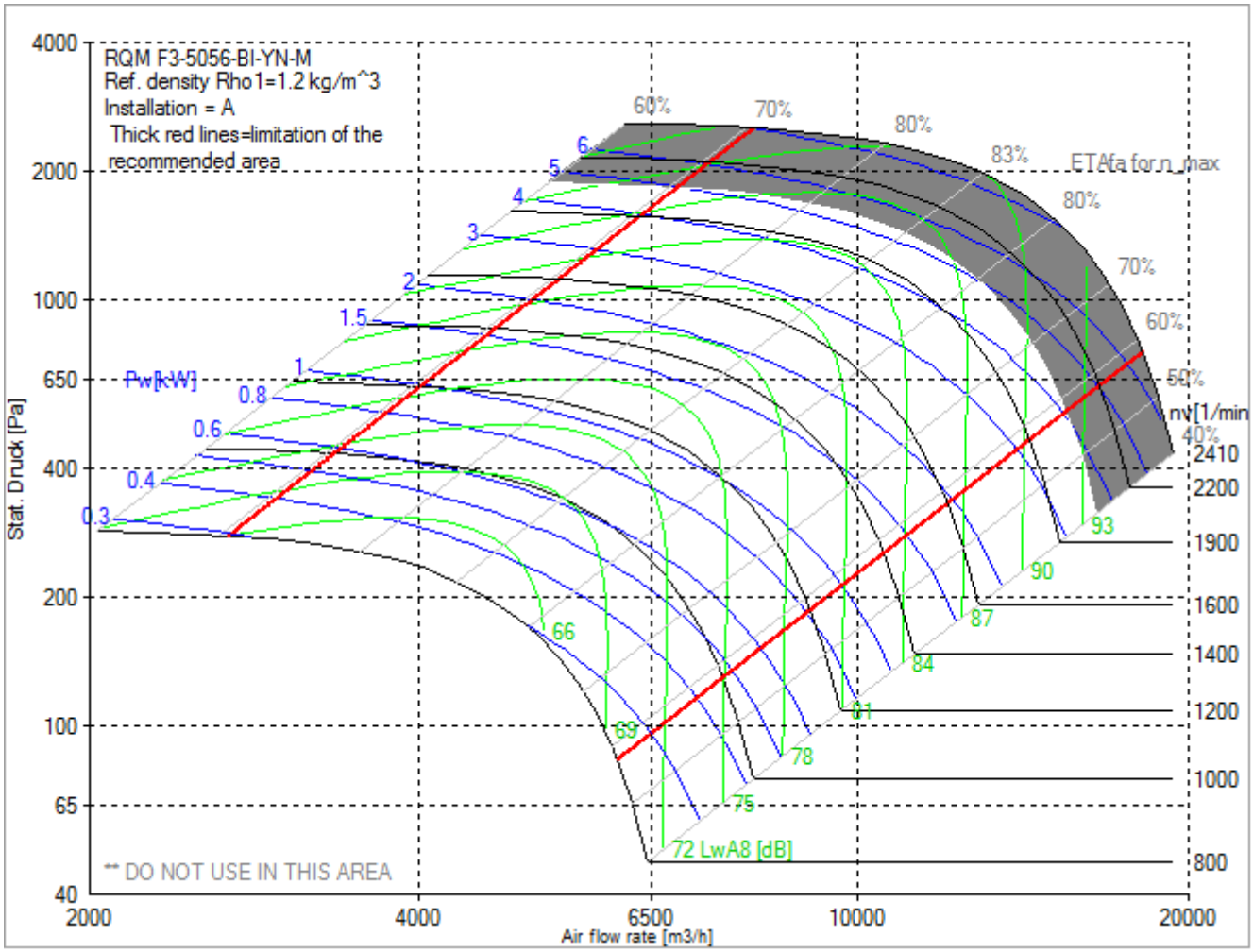

NICOTRA Gebhardt

DE WIT ventilatoren

Technical data of the fan: RQM F3-5056-BI-YN-M

fulfills the ErP requirements 2015

Description	Value	Dimension
Specified duty point		
Design duty point		
Installation acc. DIN 24163 Part 1	A	
Reference density (Rho1)	1.20	kg/m³
Medium temperature (t)	20	C
Fan weight	128	kg
Feed data		
Main's frequency (f_N)	50/60	Hz
Voltage (U_N)	3~ 380-480	V
Rated motor data		
Phases-Voltage-Frequency	3~400-117	V-Hz
Frame size-No of poles:	220-100 / IE5-10	
Power (P_N)	6.5	kW
Speed (n_N	1400	min^{-1}
Current (I_N)	16,0	A
operational limits		
Max. fan speed (n_{vmax})	2050	min^{-1}
Max. operating frequency (f_{max})	171	Hz
Temperature range for conveying medium (t_{min} ...t_{max})	-20...40	C
ErP-Data at best efficiency and density - kg/m^3		
measurement- / efficiency category	A / static	
design status of VSD	VSD is integrated	
overall efficiency (ETA_{opt})	77.6	%
achieved efficiency grade (N_{ist})	80.1	
required efficiency grade in 2013 / 2015 (N)	58 / 61	
Air flow rate (V_{opt})	11072	m³/h
pressure rise (dp_{opt})	1436	Pa
Fan speed (n_{vopt})	2050	min^{-1}
motor power input (P_{1opt})	5.69	kW
specific ratio (d_{dpopt})	1.014	

Dimensions to RQM F3-5056-BI-YN-M

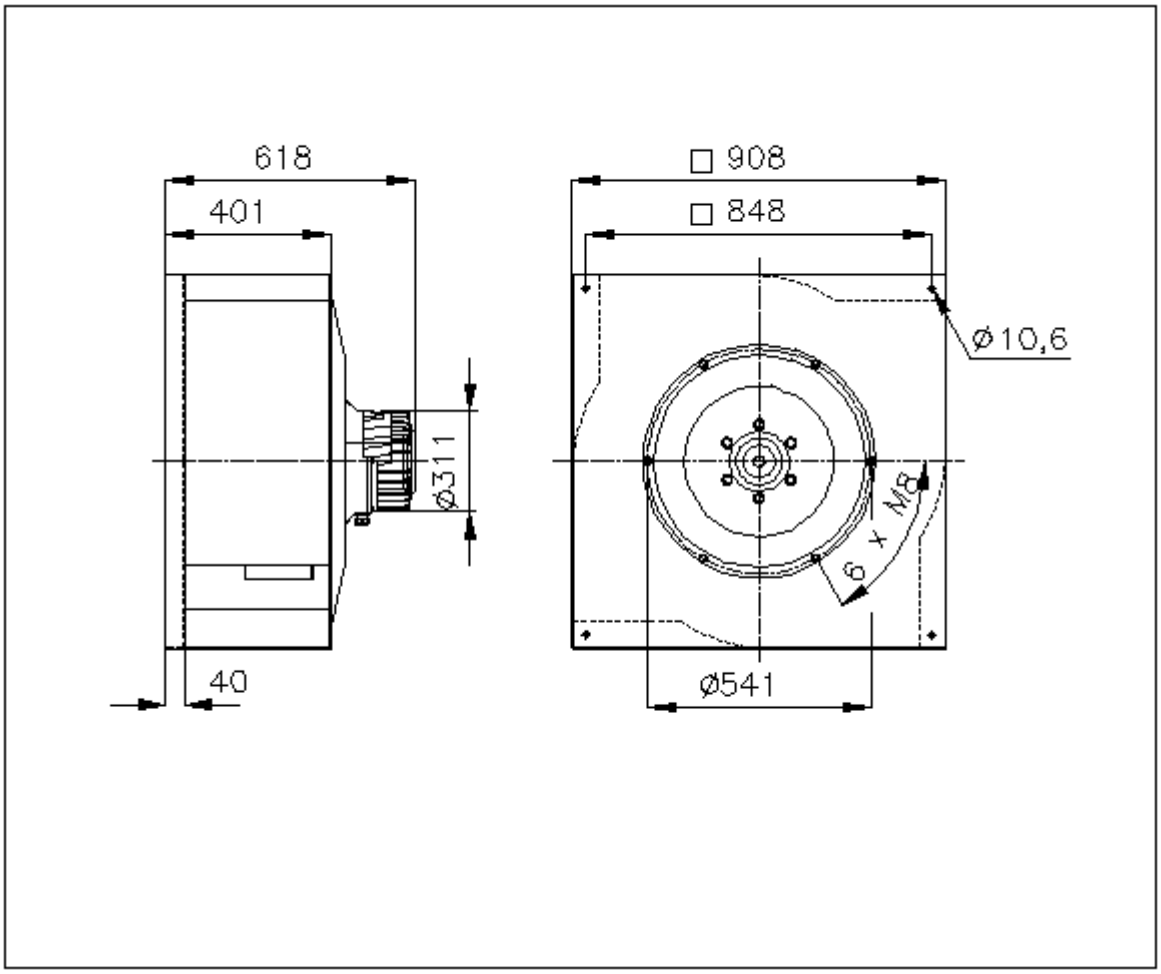

Rotation:	RD
Handing:	90

NICOTRA Gebhardt

DE WIT ventilatoren

Technical data of the fan: RQM F6-5056-BI-YN-M

fulfills the ErP requirements 2015

Description	Value	Dimension
Specified duty point		
Design duty point		
Installation acc. DIN 24163 Part 1	A	
Reference density (Rho1)	1.20	kg/m³
Medium temperature (t)	20	C
Fan weight	136	kg
Feed data		
Main's frequency (f_N)	50/60	Hz
Voltage (U_N)	3~ 380-480	V
Rated motor data		
Phases-Voltage-Frequency	3~400-117	V-Hz
Frame size-No of poles:	220-100 / IE5-10	
Power (P_N)	6.5	kW
Speed (n_N	1400	min^{-1}
Current (I_N)	16,0	A
operational limits		
Max. fan speed (n_{vmax})	2050	min^{-1}
Max. operating frequency (f_{max})	171	Hz
Temperature range for conveying medium (t_{min} ...t_{max})	-20...40	C
ErP-Data at best efficiency and density - kg/m^3		
measurement- / efficiency category	A / static	
design status of VSD	VSD is integrated	
overall efficiency (ETA_{opt})	77.6	%
achieved efficiency grade (N_{ist})	80.1	
required efficiency grade in 2013 / 2015 (N)	58 / 61	
Air flow rate (V_{opt})	11072	m³/h
pressure rise (dp_{opt})	1436	Pa
Fan speed (n_{vopt})	2050	min^{-1}
motor power input (P_{1opt})	5.69	kW
specific ratio (d_{dpopt})	1.014	

Dimensions to RQM F6-5056-BI-YN-M

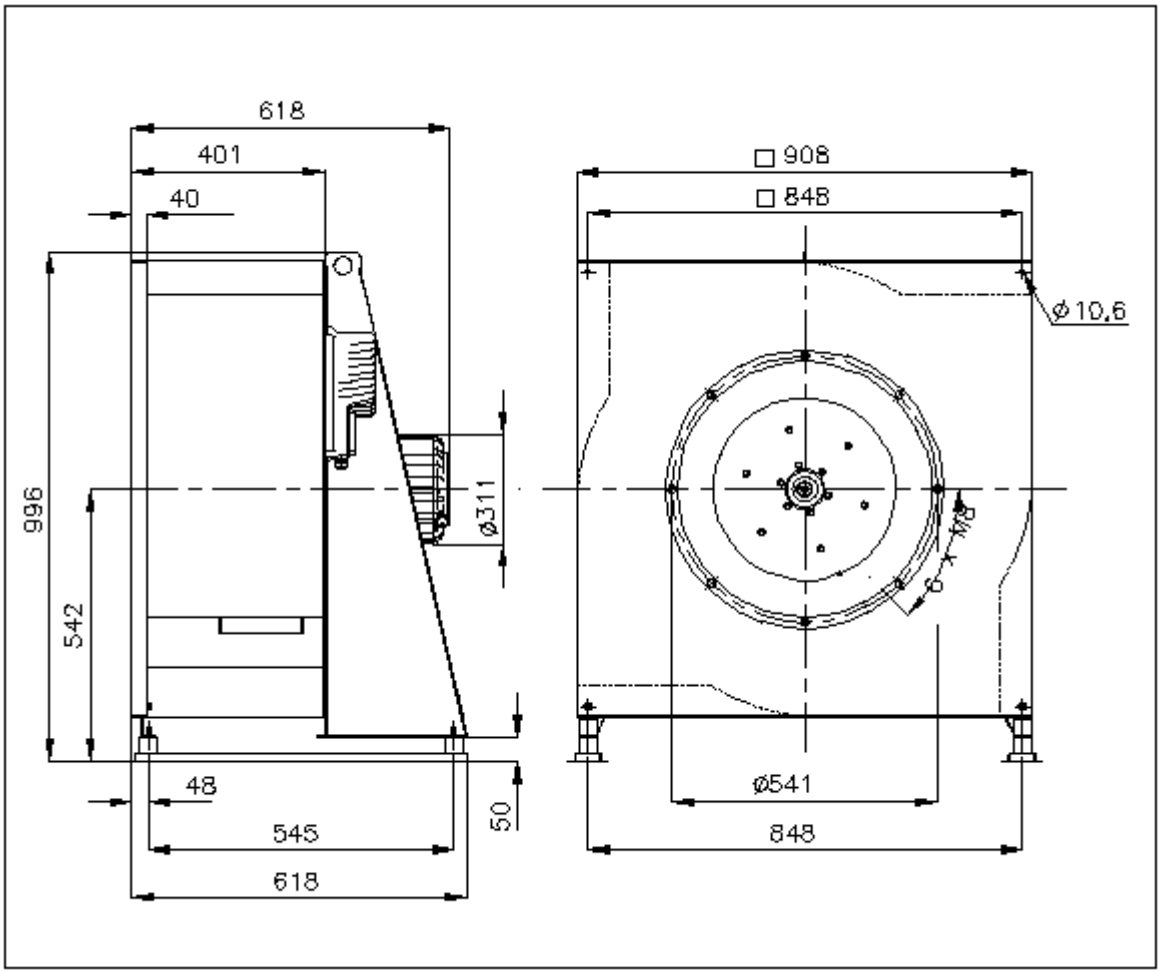

Rotation:	RD
Handing:	90