DE WIT ventilatoren

Technical details			
Art.No. / Type	108120 / RV 710-6D ErP2018		
Fan speed	935 min $^{-1}$	Nominal power	2,03 kW
Voltage	3/PE AC 400 V	Frequency	50 Hz
Rated current I_N	4,5 A	Start. current I_S/I_N	4
Weight	115 kg	tR	70 °C
IP	IP 54		

ErP 1253 data			
Wolter GmbH		RV 710-6D ErP2018	
Type	NRVU, UVU		
Drive	by transformer (not integrated)		
Heat recovery system	none	Flow rate q_{nom}	2,2786 m³/s
Input P_e	2,03 kW	SFP_{int}	n/a Ws/m³
Face velocity	3,7 m/s	Nom. ext. pressure $\Delta p_{s,ext}$	479 Pa
Overall efficiency η_e	53,9 %	Sound power level L_{WA}	83 dB
ErP 1253	2018	http://www.wolter.eu	
--		--	

Octave frequency sound								
f_M[Hz]	**LWA**	**125**	**250**	**500**	**1k**	**2k**	**4k**	**8k**
LWA5 [dB(A)]	-6	-18	-14	-13	-13	-13	-14	-25
LWA8 [dB(A)]	0	-16	-7	-6	-6	-7	-12	-20

Accessories	
Item No.	**Description**
124170	MSD 1, Motor protection switch
121600	RTD 7, Speed controler, 5-step
122700	TD 7, Speed controler, 5-step, transformer only
126640	SAD 9, Electronic speed controler, stepless
126420	SSD 6, Electronic speed controler, stepless
107100	EV 710, Flexible connection
107300	GL 710, Inlet flange
106600	VS 710, Gravity backdraft damper
106900	VM 710, Motorized backdraft damper
106120	FS 710, Flat roof socket
106320	SD 710, Socket sound attenuator
124500	GS 2, Repair switch 6-pol, 0-7,5kW 1~230 V or 3~400 V
990105	Repair switch mounting

RV 710-6D, ErP2018 Dachventilator 3~400V

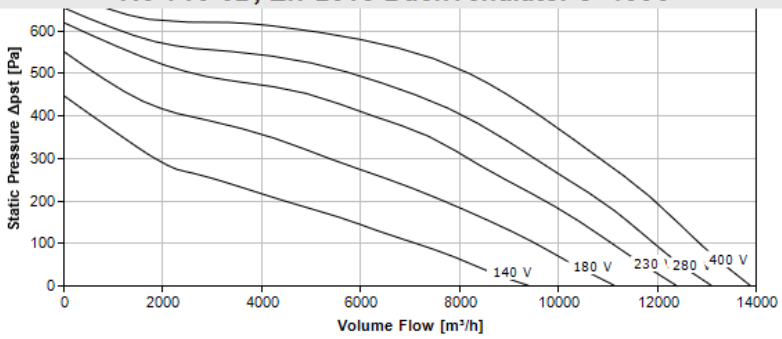

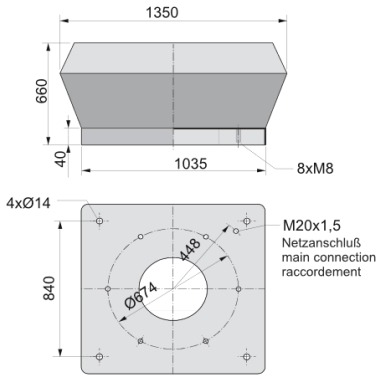

www.dewitventilatoren.nl