| *Technical details* | | | |
|---|---|---|---|
| Art.No. / Type | 108122 / RV 310-4E ErP2018 | | |
| Fan speed | 1200 min $^{-1}$ | Nominal power | 0,12 kW |
| Voltage | 1/PE AC 230 V | Frequency | 50 Hz |
| Rated current $I_N$ | 0,55 A | Start. current $I_S/I_N$ | 1,6 |
| Weight | 17,3 kg | C | 4 µF |
| tR | 70 °C | IP | IP44 |

| *ErP 1253 data* | | | |
|---|---|---|---|
| Wolter GmbH | | RV 310-4E ErP2018 | |
| Type | NRVU, UVU | | |
| Drive | by transformer (not integrated) | | |
| Heat recovery system | none | Flow rate $q_{nom}$ | 0,2864 m³/s |
| Input $P_e$ | 0,12 kW | $SFP_{int}$ | n/a Ws/m³ |
| Face velocity | 4,3 m/s | Nom. ext. pressure $\Delta p_{s,ext}$ | 133 Pa |
| Overall efficiency $\eta_e$ | 30,6 % | Sound power level $L_{WA}$ | 64 dB |
| ErP 1253 | 2018 | http://www.wolter.eu | |
| -- | | -- | |

| *Octave frequency sound* | | | | | | | | |
|---|---|---|---|---|---|---|---|---|
| **$f_M$[Hz]** | **LWA** | **125** | **250** | **500** | **1k** | **2k** | **4k** | **8k** |
| LWA5 [dB(A)] | -5 | -25 | -13 | -10 | -11 | -12 | -18 | -24 |
| LWA8 [dB(A)] | 0 | -24 | -11 | -5 | -4 | -8 | -15 | -22 |

| *Accessories* | |
|---|---|
| **Item No.** | **Description** |
| 120050 | NE 1,5, Speed controler, 5-step |
| 122050 | TE 1,5, Speed controler, 5-step, transformer only |
| 123050 | RPE 02 A, Speed controler, stepless |
| 123250 | RPE 02 U, Speed controler, stepless |
| 123450 | RPE 02 S, Speed controler, stepless |
| 107040 | EV 280/310, Flexible connection |
| 107240 | GL 280/310, Inlet flange |
| 106540 | VS 310, Gravity backdraft damper |
| 106840 | VM 310, Motorized backdraft damper |
| 106040 | FS 310, Flat roof socket |
| 106240 | SD 280/310, Socket sound attenuator |
| 124450 | GS 1, Repair switch 2-pol, 0-7,5kW 1~230 V or 3~400 V |
| 990105 | Repair switch mounting |

## RV 310-4E, ErP2018 Dachventilator 1~230V

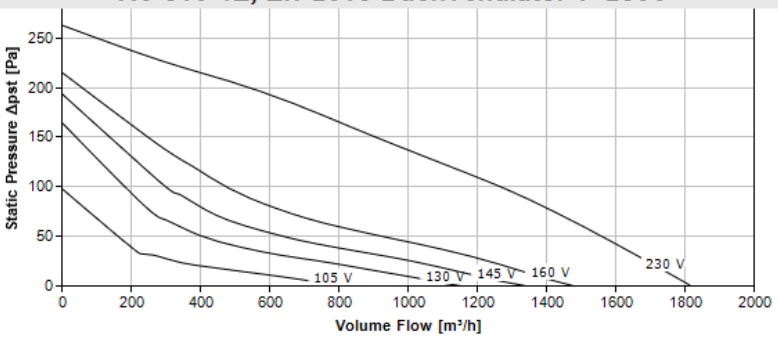


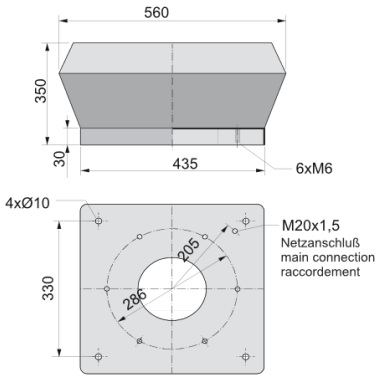


WWW.DEWITVENTILATOREN.NL