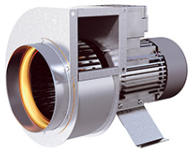

RFTX 160 A

RFTX

- 3-phase radial fan with circular inlet connection.
- The RFTX is a safe choice for numerous applications in hazardous locations.
- The fan is intended to transport gas in explosive environment.
- The fan can only be used in zone 1 and 2.
- The ATEX fan is not subject to the ErP directive.
- Impeller with forward curved blades.
- The external rotor motor is separated from the air stream and has maintenance-free sealed ballbearings.
- RFTX cannot be speed controlled
- Integrated junction box.
- External motor protection available as an accessory.
- Fan housing is manufactured from galvanized sheet steel with a nonsparking inlet cone made from copper.
- The fan is certified according to directive 2014/34/EC.
- Compliance with the standards EN 60079-0 + A11: 2013 and EN 14986: 2007.
- The fan is intended to be installed indoors in a duct system.

Accessories

- Motor protection 0,40-0,63 A
- Outlet pipe 160 A/C

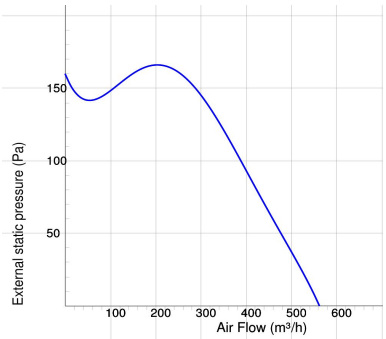

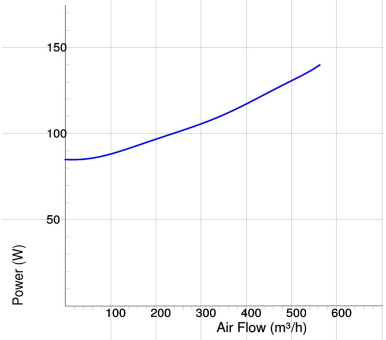

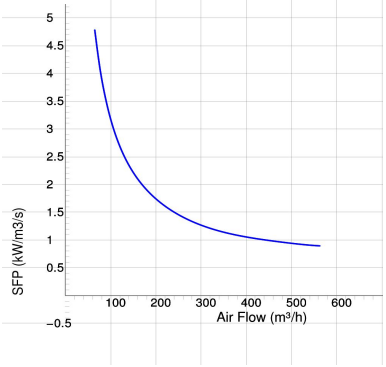

TECHNICAL DATA	7730004 RFTX 160 A
Voltage	400 V
Phase	3 ~
Frequency	50 Hz
Power	143 W
Current	0.53 A
Speed	1300 r.p.m.
Max. temperature of transported air	40 °C
Sound pressure level at 3 m	50 dB(A)
Weight	8.1 kg
Enclosure class	55 IP
Insulation class, motor	F
Capacitor	- µF
Max. flow	565 m³/h
Max. pressure	166 Pa

SOUND DATA	Flow (m³/h)	L_{WA} tot dB (A)	63Hz	125Hz	250Hz	500Hz	1KHz	2KHz	4KHz	8KHz
1. Surrounding Lw dB(A) 400V	378	57	28	28	39	48	52	54	43	40
1. Outlet Lw dB(A) 400V	378	64	50	57	58	58	59	52	48	40
1. Inlet Lw dB(A) 400V	378	64	50	57	58	57	56	53	47	37

DIMENSIONS

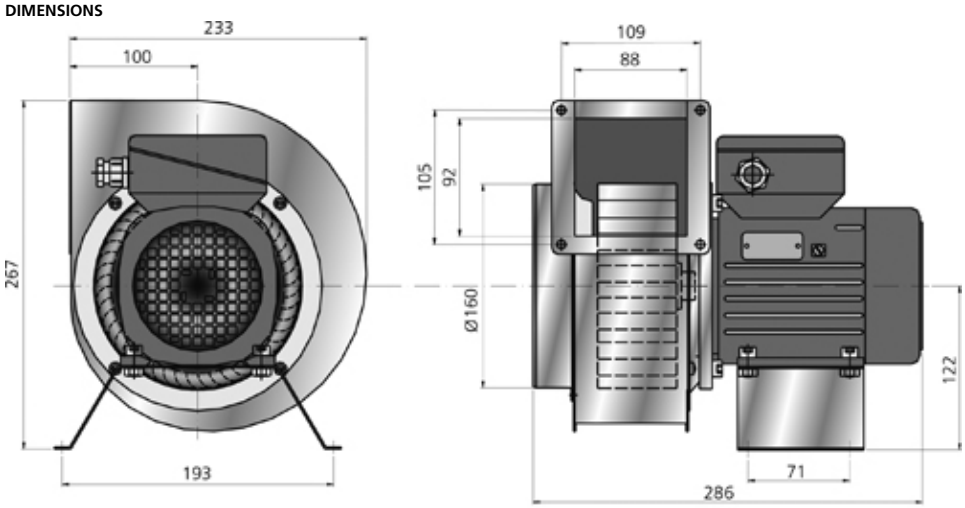

Voltage steps

1
400V