IRB 500x250 E1 ErP

IRB Rectangular

- Insulated duct fan with rectangular connections.
- Equipped with 50 mm of thermal and acoustic insulation makes it ideal for handling cold air.
- Designed for high pressure and long, complicated duct runs.
- The design priorities functionality, durability and longevity.
- Impeller with backward curved blades.
- The external rotor motor has maintenance-free sealed ball-bearings.
- Integrated motor protection.
- Junction box has enclosure class IP 54.
- For speed control a transformer or electric speed controller can be connected.
- The housing is manufactured from galvanized sheet steel.
- The fan is intended to be installed in a duct system.
- When duct connected the fan can be installed outside or in damp environments.

This product cannot be speed controlled below 165 V.

Accessories

- VRDE 1,5
- VRTE C
- VRS 2.0
- MB Universal
- Dukstos 500x250

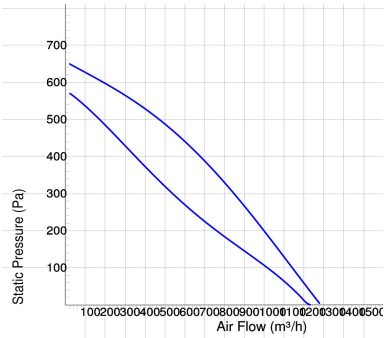

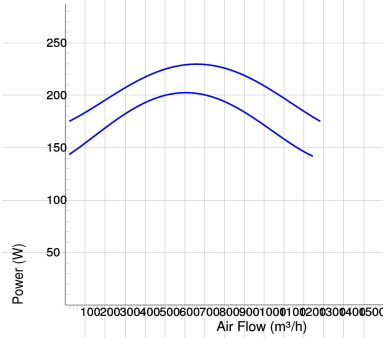

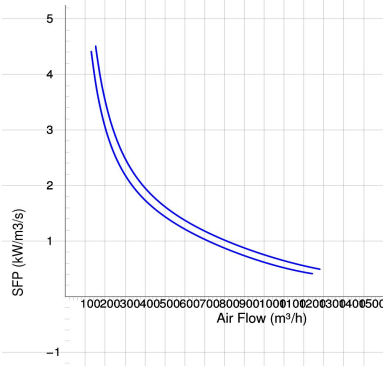

TECHNICAL DATA	7880034 IRB 500x250 E1 ErP
Voltage	230 V
Phase	1 ~
Frequency	50 Hz
Power	233 W
Current	1.02 A
Current when speed controlled	1.26 A
Speed	2740 r.p.m.
Max. temperature of transported air	80 °C
Max. temperature of transported air when speed controlled	75 °C
Sound pressure level at 3 m	47 dB(A)
Weight	36.8 kg
Enclosure class	44 IP
Insulation class, motor	F
Capacitor	6 µF
Max. flow	1285 m³/h
Max. pressure	652 Pa
Voltage range	220-240 V

SOUND DATA	Flow (m³/h)	L_{WA} tot dB (A)	63Hz	125Hz	250Hz	500Hz	1KHz	2KHz	4KHz	8KHz
2. Surrounding Lw dB(A) 230V	950	54	44	40	50	48	45	46	39	34
2. Outlet Lw dB(A) 230V	950	73	52	56	66	64	65	68	63	57
2. Inlet Lw dB(A) 230V	950	65	55	58	60	54	57	56	54	48
1. Inlet Lw dB(A) 165V	860	61	45	51	57	49	53	52	48	43

DIMENSIONS

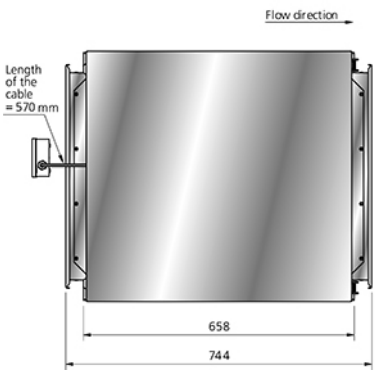

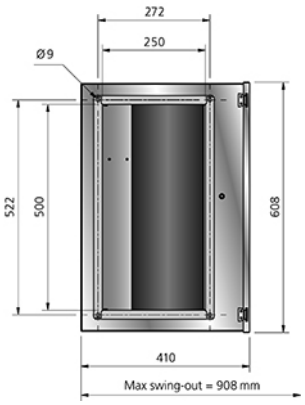

Voltage steps

1	2
165V	230V