energy
efficient
ventilation

www.ostberg.com

LPKB 125 C1 50/(60)HZ

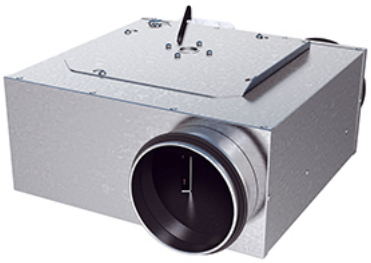

LPKB

- Low profile duct fan with circular connection.
- A small and useful duct fan which are perfect for spaces with minimum height clearance.
- With one connection on the inlet side.
- High capacity and efficiency with low sound levels.
- Impeller with backward curved blades.
- The external rotor motor has maintenance-free sealed ball-bearings.
- Integrated motor protection.
- Junction box has enclosure class IP 54.
- For speed control a transformer or electronic speed controller can be connected.
- Fan housing is manufactured from galvanized sheet steel.
- Duct connections are equipped with rubber seals.
- The fan is intended to be installed in a duct system.
- When duct connected the fan can be installed outside or in damp environments.
- The mounting brackets simplify installation in any position.

DIAGRAMS

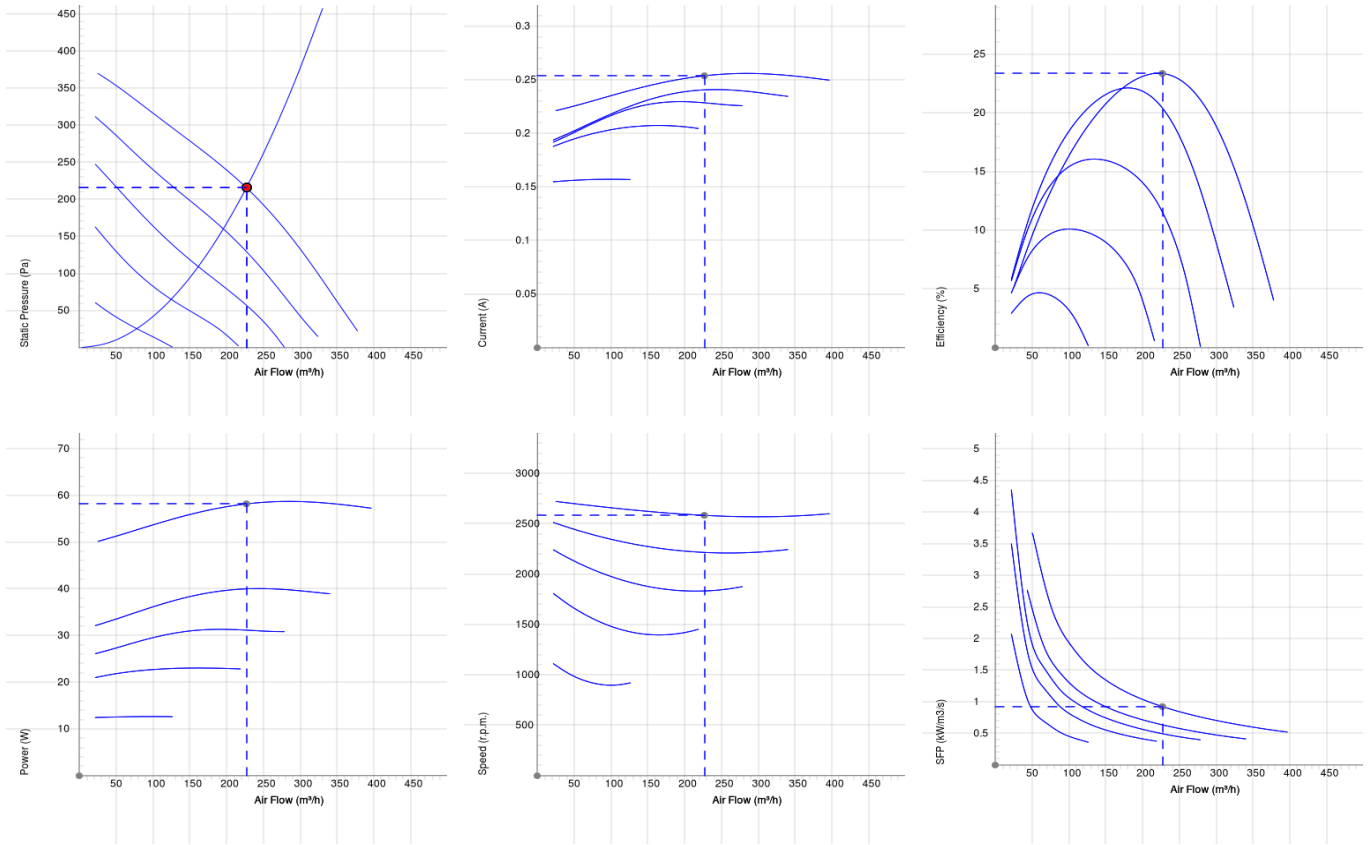

Work Point

Air Flow (m³/h)	Static Pressure (Pa)	Power (W)	Speed (r.p.m.)	Current (A)	Efficiency (%)	SFP (kW/m3/s)	Voltage (V)
227	216	58.2	2584	0.254	23.3	0.923	230

SOUND DATA

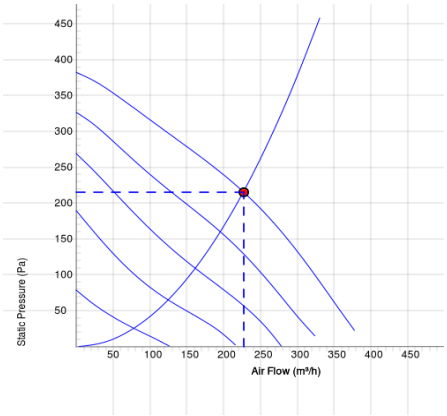

	Tot	63	125	250	500	1k	2k	4k	8k
Inlet Lw dB(A)	68.3	51.2	61.7	62.6	64.1	55.7	52.9	50.2	45.8
Outlet Lw dB(A)	69.8	54.6	60.9	62.7	65.5	62.2	57.4	54.5	47.5
Surrounding Lw dB(A)	52.9	32.4	37.9	48.3	48.9	44.5	39.9	33.9	30.8

Work Point

Air Flow (m³/h)	Static Pressure (Pa)	Power (W)	Speed (r.p.m.)	Current (A)	Efficiency (%)	SFP (kW/m3/s)	Voltage (V)
227	216	58.2	2584	0.254	23.3	0.923	230

TECHNICAL DATA

	LPKB 125 C1 aut tp 7540231		LPKB 125 C1 man tp 7540233	
Parameter	**Value**	**Unit**	**Value**	**Unit**
Voltage	230	V	230	V
Phase	1	~	1	~
Frequency	50	Hz	50	Hz
Optional frequency	60	Hz	60	Hz
Power	59	W	59	W
Current	0.26	A	0.26	A
Speed	2570	r.p.m.	2570	r.p.m.
Max. temperature of transported air	80	°C	80	°C
Max. temperature of transported air when speed controlled	80	°C	80	°C
Sound pressure level at 3 m	47	dB(A)	47	dB(A)
Weight	5.2	kg	5.2	kg
Enclosure class	44	IP	44	IP
Insulation class, motor	F		F	
Capacitor	2	µF	2	µF
Duct connection	125	mm	125	mm
Max. flow	396	m³/h	396	m³/h
Max. pressure	382	Pa	382	Pa
Voltage range	220-240	V	220-240	V

ECODESIGN

Parameter	Value	Unit
(a) Manufacturer	Östberg	-
(b) Model code	LPKB 125 C1 50/(60)Hz	-
(c) Declared type	NRVU / UVU	-
(d) Type of drive	Multi-speed drive	-
(e) Type of HRS	none	-
(f) Thermal efficiency	N/A	%
(g) Nominal flow rate	0.062	m^3/s
(h) Effective power input	58	kW
(i) SFP int	N/A	$W/(m^3/s)$
(j) Face velocity	5.06	m/s
(k) Nominal external pressure	205	Pa
(l) Internal pressure drop	N/A	Pa
(n) Static efficiency	20.8	%
(o) External (internal) leakage rate	1.35 (N/A)	%
(p) Filter classification	N/A	%
(q) Visual filter warning	N/A	-
(r) Sound power level	54	dB LwA
(s) Disassembly instructions	www.ostberg.com	-

WIRING DIAGRAM

- (M) = Fan Motor
- (M1) = Fan Motor
- (M2) = Fan Motor
- (M3) = Rotor Motor
- 1 = Yellow/Green
- 2 = Black
- 3 = Blue
- 4 = Brown
- 5 = White
- 6 = Orange
- 7 = Grey
- 8 = Red
- 9 = Green
- 10 = Violet
- 11 = Quick switch
- 12 = Yellow

4040001

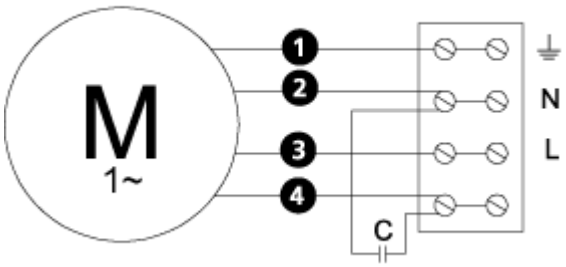

DIMENSIONS

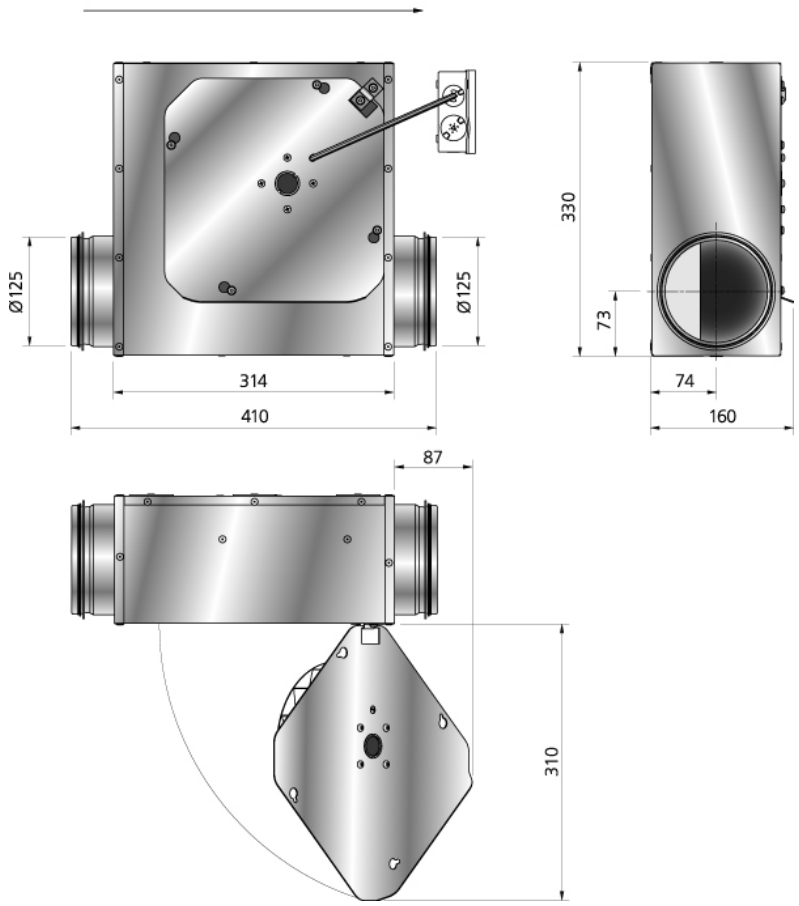

ACCESSORIES

Mechanical accessories

MK 125

BSV 125

RSK 125

VK 125

LDC 125

Electrical accessories

VRDE 1,5

VRTE C

VRS 0.5